POS.	N°CODICE	Q	DESCRIZIONE	DESIGNATION	BENENNUNG	DESCRIPTION	DENOMINACIONES
H	435119	1	FIANCATA COMPLETA	COTE	SEITENWAND	SIDE PANEL	LADO
I	435125	1	FIANCATA COMPLETA	COTE	SEITENWAND	SIDE PANEL	LADO

DISTRIBUTORE HAWE 5 ELEMENTI - 197468 - (24 V)

** Distributeur HAWE avec 5 éléments - 24 V*
** HAWE control valve block with 5 elements - 24 V*
** HAWE-Steuerventilblock mit 5 Elementen - 24 V*
** Distribuidor HAWE 5 elementos - 24 V*

TAV. GN.05.01A

matr. G.A23.0417

PM 12,5
PM 12,5 S
PM 13,5 SP

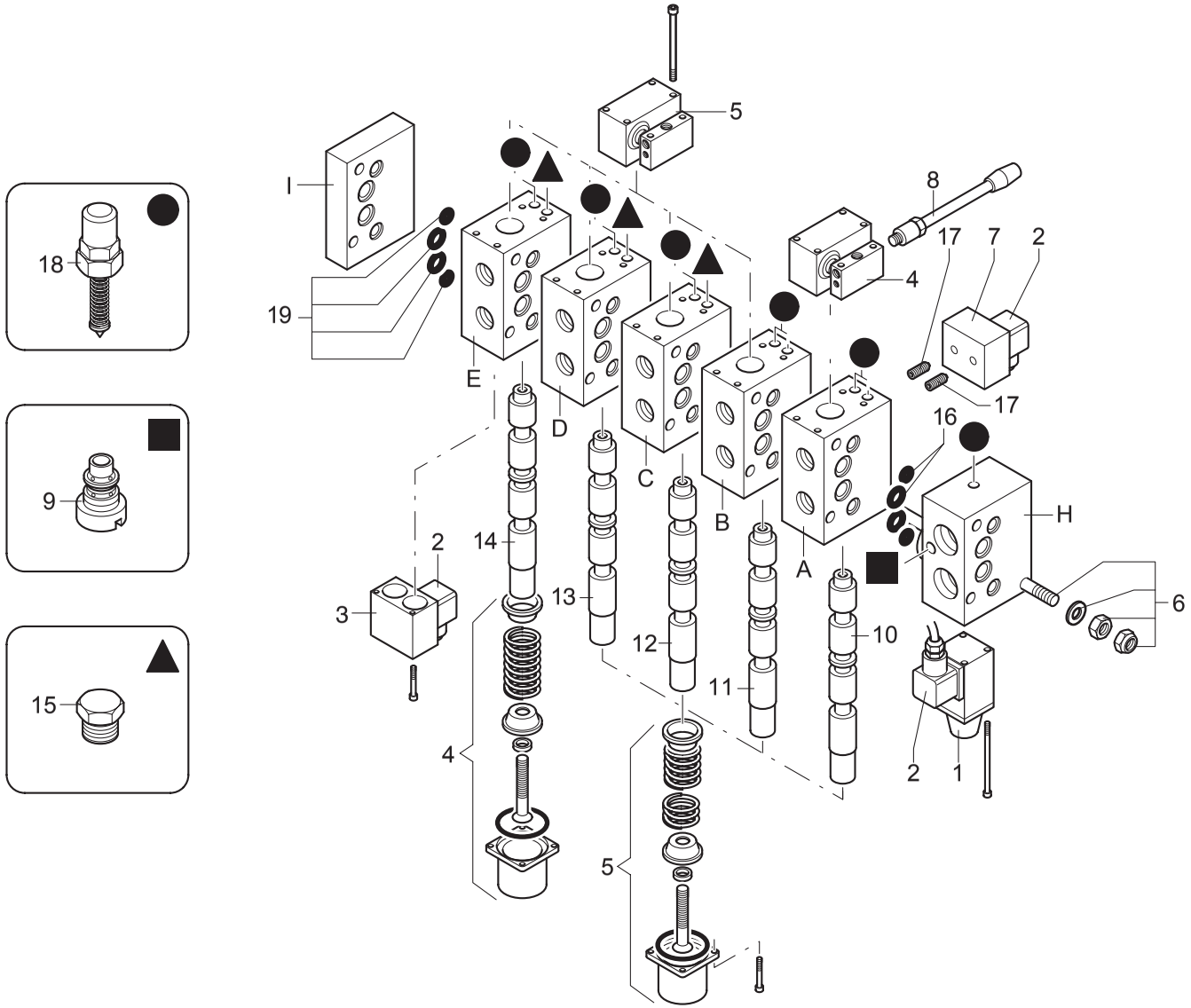

UN01-R-0404-00-M-C-13

UNISTUDIO - Moden

POS.	N°CODICE	Q	DESCRIZIONE	DESIGNATION	BENENNUNG	DESCRIPTION	DENOMINACIONES
1	435174	1	ELETTROVALVOLA	ELECTROVANNE	ELEKTROVENTIL	ELECTROVALVE	ELECTRO-VALVULA
2	435128	6	CONNETTORE	CONNECTEUR	VERBINDER	CONNECTOR	CONECTOR
3	435198	4	SOLENOIDE	SOLENOIDE	SOLENOID	SOLENOID	SOLENOIDE
4	435195	1	ORGANO DI MANOVRA	DISPOSITIF MOUVEMENT	SCHALT VORRICHTUNG	MOTION DEVICE	ORGANO DE MANOVRA
5	435200	4	ORGANO DI MANOVRA	DISPOSITIF MOUVEMENT	SCHALT VORRICHTUNG	MOTION DEVICE	ORGANO DE MANOVRA
6	435209	1	KIT TIRANTE	KIT TIRANT	ZUGSTANGENSATZ	TIEROD KIT	KIT ESPARRAGO
7	435182	1	ELETTROVALVOLA	ELECTROVANNE	ELEKTROVENTIL	ELECTROVALVE	ELECTRO-VALVULA
8	435175	1	LEVA	LEVIER	HEBEL	LEVER	PALANCA
9	435191	1	VALVOLA	SOUPAPE	VENTIL	VALVE	VALVULA
10	435236	1	ASTA STAB.	TIGE	STANGE	ROD	VASTAGO
11	435189	1	ASTA ROTAZ.	TIGE	STANGE	ROD	VASTAGO
12	435185	1	ASTA COLONNA	TIGE	STANGE	ROD	VASTAGO
13	435240	1	ASTA MENSOLA	TIGE	STANGE	ROD	VASTAGO
14	435187	1	ASTA SFILO	TIGE	STANGE	ROD	VASTAGO
15	435143	3	TAPPO	BOUCHON	VERSCHLUSS	CAP	TAPON
16	435192	1	KIT GUARNIZIONE	KIT JOINT	DICHTSATZ	SEAL KIT	KIT JUNTAS
17	435196	1	KIT VITI - LS	KIT VIS - LS	LS - SCHRAUBENSATZ	LS - SCREWS KIT	KIT TORNILLOS - LS
18	435137	8	VALVOLA	SOUPAPE	VENTIL	VALVE	VALVULA
19	435225	5	KIT GUARNIZIONE	KIT JOINT	DICHTSATZ	SEAL KIT	KIT JUNTAS
A	435235	1	ELEM. STAB. COMPLETO	ELEM. STAB. COMPL.	STUETZARMSTEUERVENTIL	COMPL. OUTRIGGER ELEM.	EL. GATOS COMPLETO
B	435237	1	ELEM. ROTAZ. COMP.	ELEM. ROTATION COMPL.	SCHWENKENSTEUERVENTIL	COMPL. SLEWING ELEM.	EL. GIRO COMPLETO
C	435238	1	ELEM. COLONNA COMPL.	ELEM. COLONNE COMPL.	SAULENSTEUERVENTIL	COMPL. COLUMN ELEM.	EL. COLUMNA COMPL.
D	435239	1	ELEM. MENSOLA COMPL.	ELEM. 1ER BRAS COMPL.	HUBRAHMENSTEUERVENTIL	COMPL. MAIN BOOM ELEM	EL. PRIMER BRAZO ART.
E	435241	1	ELEM. SFILO BR. COMPL.	ELEM.EXT.FLECHE COM.	AUSLEGER AUSZ. VENTIL	COMPL. BOOM EXT. ELEM	EL. EXTENSION BRAZOS
H	435234	1	FIANCATA COMPLETA	COTE	SEITENWAND	SIDE PANEL	LADO
I	435208	1	FIANCATA COMPLETA	COTE	SEITENWAND	SIDE PANEL	LADO

DISTRIBUTORE HAWE 6 ELEMENTI - 197330 - (24 V)

** Distributeur HAWE avec 6 éléments - 24 V*
** HAWE -Steuerventilblock mit 6 Elementen - 24 V*
** HAWE control valve block with 6 elements - 24 V*
** Distribuidor HAWE 6 elementos - 24 V*

TAV. GN.06.01

matr. G.A23.0001

PM 12,5
PM 12,5 S
PM 13,5 SP

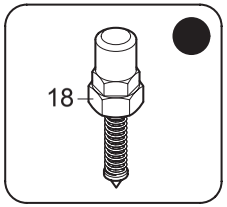

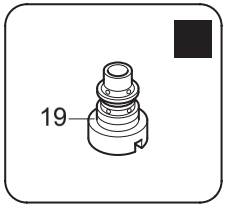

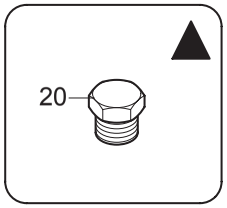

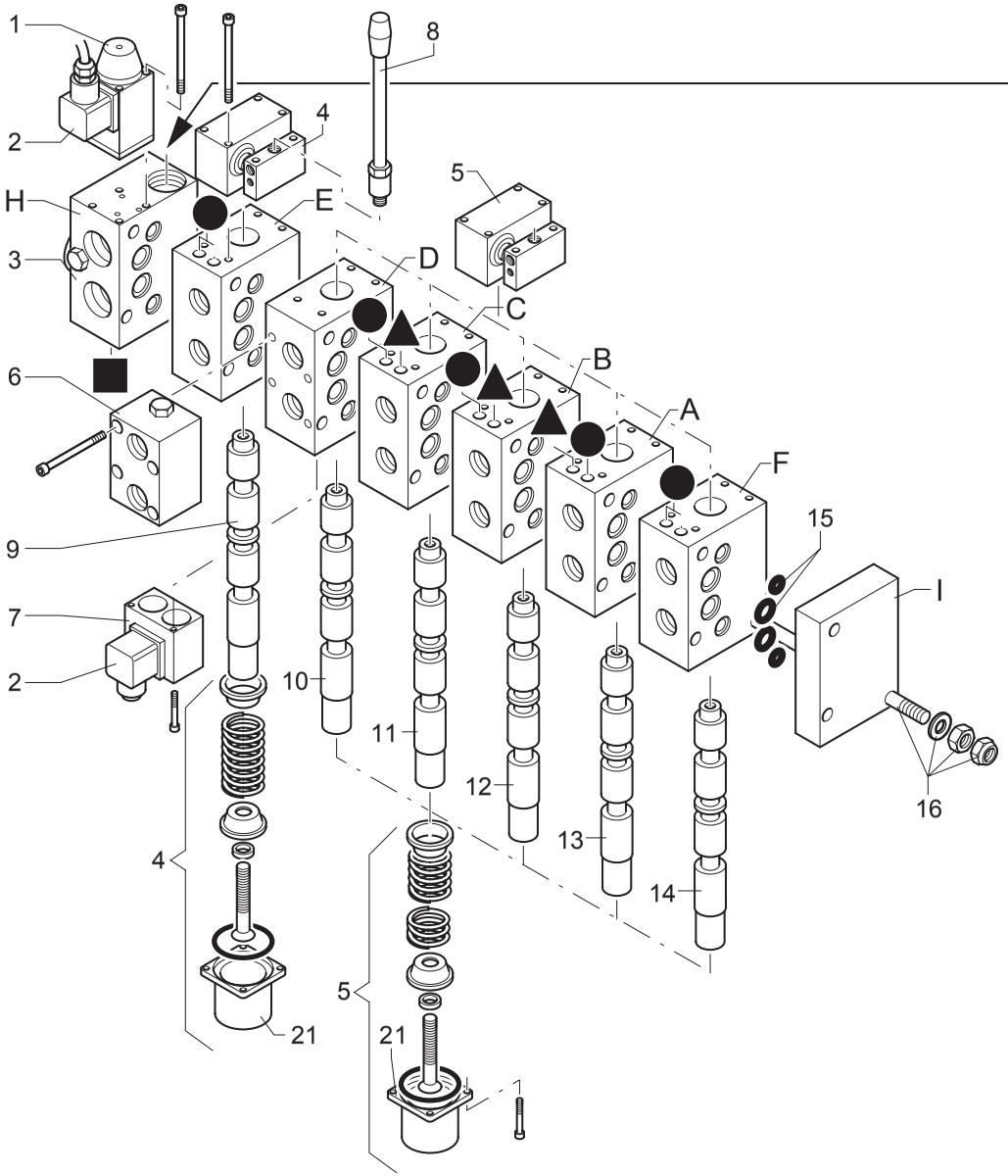

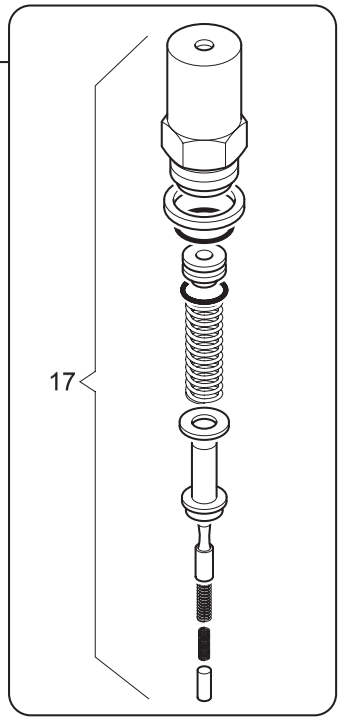

Per sfilo br.stab.idr.

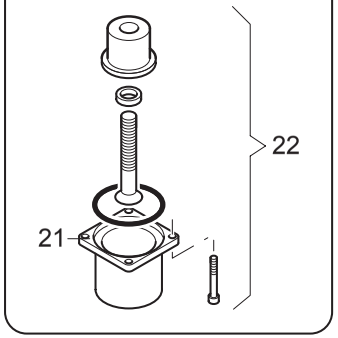

UNISTUDIO - Moden

POS.	N°CODICE	Q	DESCRIZIONE	DESIGNATION	BENENNUNG	DESCRIPTION	DENOMINACIONES
1	435127	1	SOLENOIDE	SOLENOIDE	SOLENOID	SOLENOID	SOLENOIDE
2	435128	6	CONNETTORE	CONNECTEUR	VERBINDER	CONNECTOR	CONECTOR
3	435130	1	CORPO	CORPS	GEHAUSE	BODY	CUERPO
4	435134	1	ORGANO DI MANOVRA	DISPOSITIF MOUVEMENT	SCHALT VORRICHTUNG	MOTION DEVICE	ORGANO DE MANOVRA
5	435151	5	ORGANO DI MANOVRA	DISPOSITIF MOUVEMENT	SCHALT VORRICHTUNG	MOTION DEVICE	ORGANO DE MANOVRA
6	435139	1	VALVOLA	SOUPAPE	VENTIL	VALVE	VALVULA
7	435141	5	SOLENOIDE	SOLENOIDE	SOLENOID	SOLENOID	SOLENOIDE
8	435133	1	LEVA	LEVIER	HEBEL	LEVER	PALANCA
9	435136	1	ASTA STAB.	TIGE	STANGE	ROD	VASTAGO
10	435138	1	ASTA ROTAZ.	TIGE	STANGE	ROD	VASTAGO
11	435142	1	ASTA COLONNA	TIGE	STANGE	ROD	VASTAGO
12	435144	1	ASTA MENSOLA	TIGE	STANGE	ROD	VASTAGO
13	435145	1	ASTA SFILO	TIGE	STANGE	ROD	VASTAGO
14	435153	2	ASTA 1°-2° ATTIVAZIONE	TIGE	STANGE	ROD	VASTAGO
15	435132	7	KIT GUARNIZIONE	KIT JOINT	DICHTSATZ	SEAL KIT	KIT JUNTAS
16	435109	1	KIT TIRANTE	KIT TIRANT	ZUGSTANGENSATZ	TIEROD KIT	KIT ESPARRAGO
17	435129	1	VALVOLA	SOUPAPE	VENTIL	VALVE	VALVULA
18	435137	6	VALVOLA	SOUPAPE	VENTIL	VALVE	VALVULA
19	435131	1	VALVOLA	SOUPAPE	VENTIL	VALVE	VALVULA
20	435143	3	TAPPO	BOUCHON	VERSCHLUSS	CAP	TAPON
21	435162	6	KIT COPERCHIO	KIT COUVERCLE	DECKELKIT	COVER KITTTT	KIT TAPA
22	435110	1	KIT ATTACCO LEVA	KIT ATTACHE LEVIER	HEBELVERBINDUNGSKIT	LEVER COUPLING KIT	KIT CONEXION PALANCA
A	435124	1	ELEM. SFILO BR. COMPL.	ELEM.EXT.FLECHE COM.	AUSLEGER AUSZ. VENTIL	COMPL. BOOM EXT. ELEM	EL. EXTENSION BRAZOS
B	435123	1	ELEM. MENSOLA COMPL.	ELEM. 1ER BRAS COMPL.	HUBRAHMENSTEUERVENTIL	COMPL. MAIN BOOM ELEM	EL. PRIMER BRAZO ART.
C	435122	1	ELEMENTO COLONNA COM.	ELEM. COLONNE COMPL.	SAULENSTEUERVENTIL	COMPL. COLUMN ELEM.	EL. COLUMNA COMPLETO
D	435121	1	ELEM. ROTAZ. COMP.	ELEM. ROTATION COMPL.	SCHWENKENSTEUERVENTIL	COMPL. SLEWING ELEM.	EL. GIRO COMPLETO

DISTRIBUTORE HAWE 6 ELEMENTI - 197330 - (24 V)

** Distributeur HAWE avec 6 éléments - 24 V*
** HAWE -Steuerventilblock mit 6 Elementen - 24 V*
** HAWE control valve block with 6 elements - 24 V*
** Distribuidor HAWE 6 elementos - 24 V*

TAV. GN.06.01

matr. G.A23.0001

PM 12,5
PM 12,5 S
PM 13,5 SP

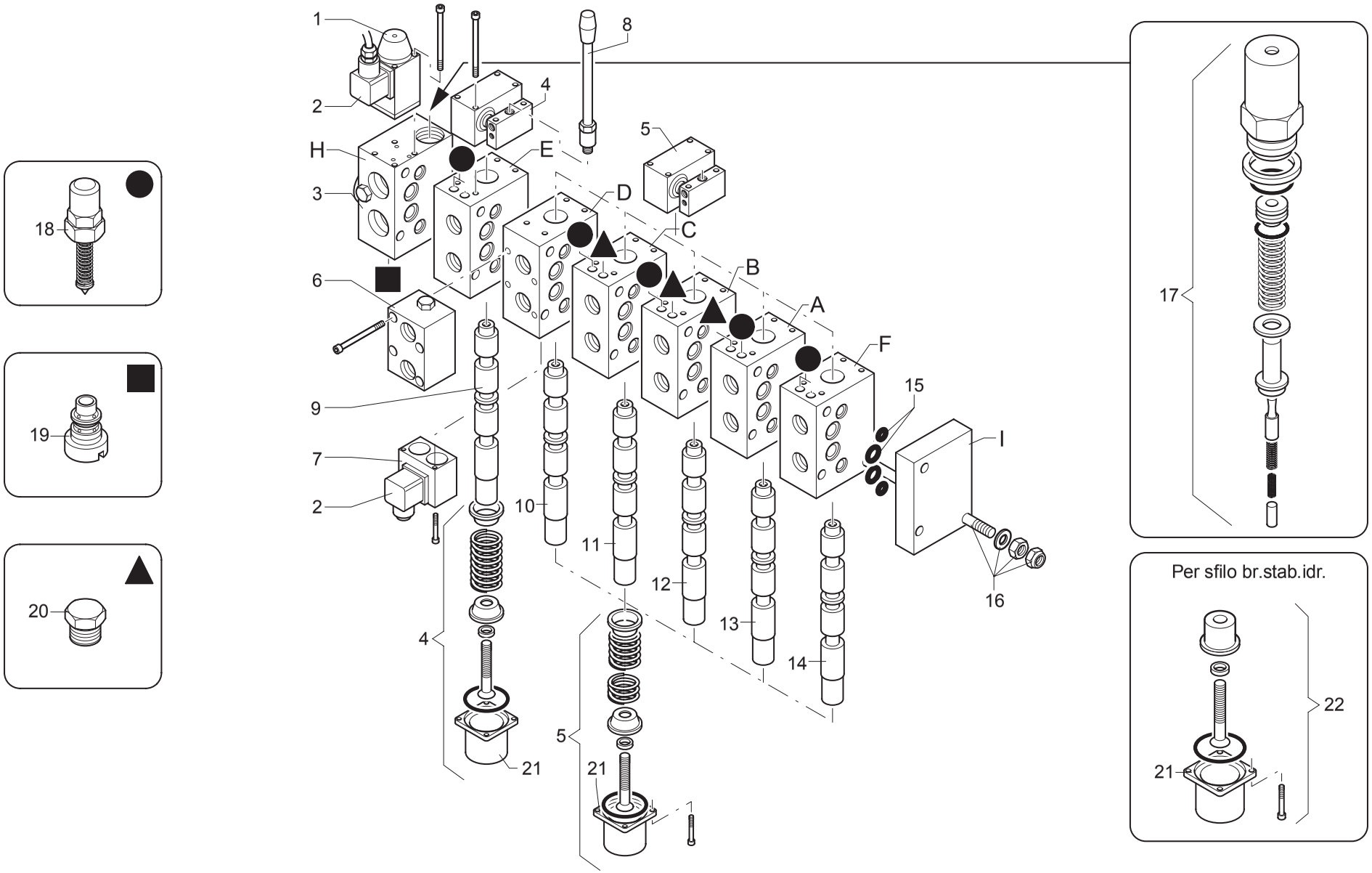

UNISTUDIO - Moden

POS.	N°CODICE	Q	DESCRIZIONE	DESIGNATION	BENENNUNG	DESCRIPTION	DENOMINACIONES
E	435120	1	ELEM. STAB. COMPLETO	ELEM. STAB. COMPL.	STUETZARMSTEUERVENTIL	COMPL. OUTRIGGER ELEM	EL. GATOS COMPLETO
F	435152	1	ELEMENTO 1° ATT. COMPL.	ELEMENT	STEUERVENTIL	ELEMENT	ELEMENTO
H	435119	1	FIANCATA COMPLETA	COTE	SEITENWAND	SIDE PANEL	LADO
I	435125	1	FIANCATA COMPLETA	COTE	SEITENWAND	SIDE PANEL	LADO

DISTRIBUTORE HAWE 6 ELEMENTI - 197469 - (24 V)

** Distributeur HAWE avec 6 éléments - 24 V*
** HAWE -Steuerventilblock mit 6 Elementen - 24 V*
** HAWE control valve block with 6 elements - 24 V*
** Distribuidor HAWE 6 elementos - 24 V*

TAV. GN.06.01A

matr. G.A23.0417

PM 12,5
PM 12,5 S
PM 13,5 SP

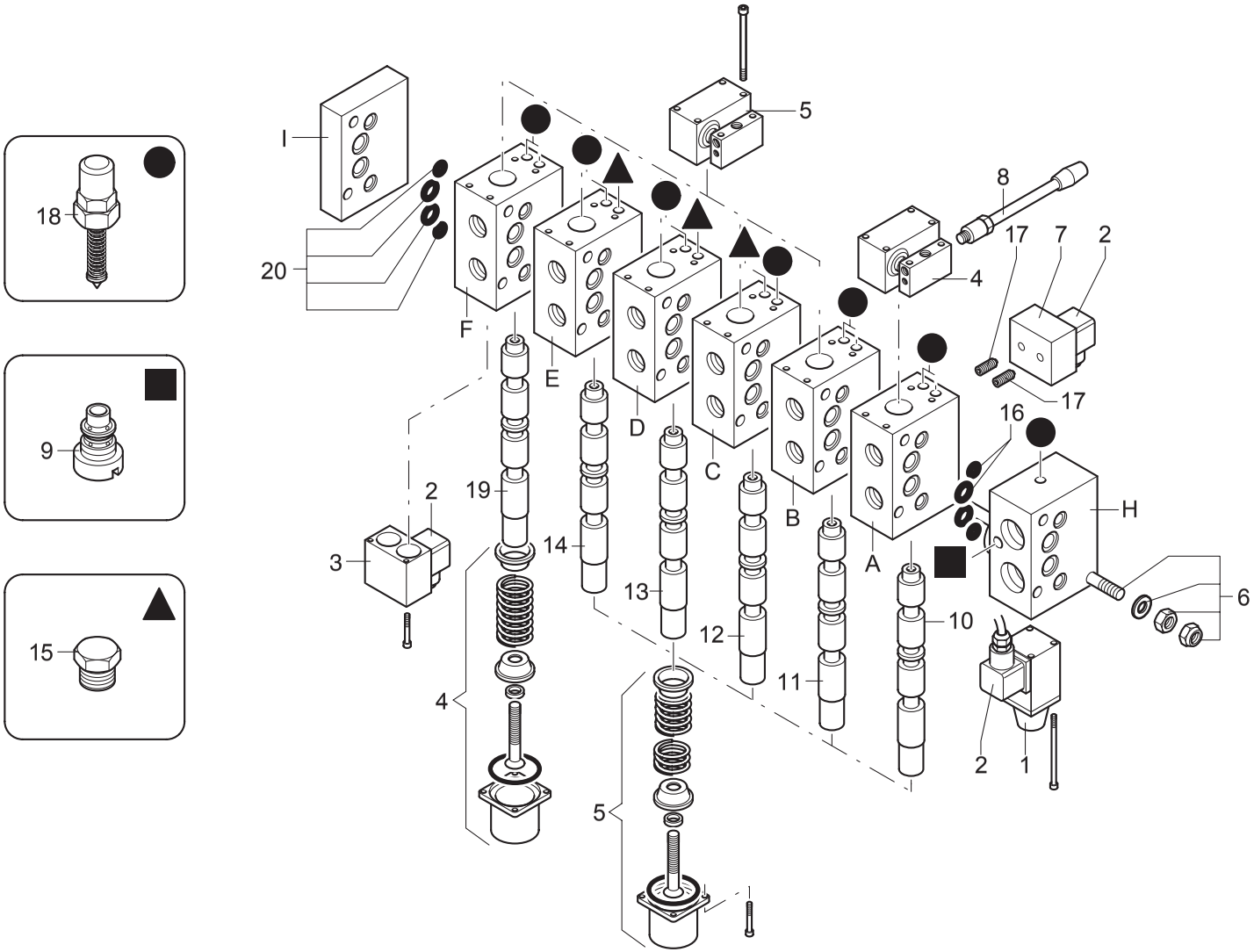

UN01-R-0405-00-M-C-13

POS.	N°CODICE	Q	DESCRIZIONE	DESIGNATION	BENENNUNG	DESCRIPTION	DENOMINACIONES
1	435174	1	ELETTROVALVOLA	ELECTROVANNE	ELEKTROVENTIL	ELECTROVALVE	ELECTRO-VALVULA
2	435128	7	CONNETTORE	CONNECTEUR	VERBINDER	CONNECTOR	CONECTOR
3	435198	5	SOLENOIDE	SOLENOIDE	SOLENOID	SOLENOID	SOLENOIDE
4	435195	1	ORGANO DI MANOVRA	DISPOSITIF MOUVEMENT	SCHALT VORRICHTUNG	MOTION DEVICE	ORGANO DE MANOVRA
5	435200	5	ORGANO DI MANOVRA	DISPOSITIF MOUVEMENT	SCHALT VORRICHTUNG	MOTION DEVICE	ORGANO DE MANOVRA
6	435210	1	KIT TIRANTE	KIT TIRANT	ZUGSTANGENSATZ	TIEROD KIT	KIT ESPARRAGO
7	435182	1	ELETTROVALVOLA	ELECTROVANNE	ELEKTROVENTIL	ELECTROVALVE	ELECTRO-VALVULA
8	435175	1	LEVA	LEVIER	HEBEL	LEVER	PALANCA
9	435191	1	VALVOLA	SOUPAPE	VENTIL	VALVE	VALVULA
10	435236	1	ASTA STAB.	TIGE	STANGE	ROD	VASTAGO
11	435189	1	ASTA ROTAZ.	TIGE	STANGE	ROD	VASTAGO
12	435185	1	ASTA COLONNA	TIGE	STANGE	ROD	VASTAGO
13	435240	1	ASTA MENSOLA	TIGE	STANGE	ROD	VASTAGO
14	435187	1	ASTA SFILO	TIGE	STANGE	ROD	VASTAGO
15	435143	3	TAPPO	BOUCHON	VERSCHLUSS	CAP	TAPON
16	435192	1	KIT GUARNIZIONE	KIT JOINT	DICHTSATZ	SEAL KIT	KIT JUNTAS
17	435196	1	KIT VITI - LS	KIT VIS - LS	LS - SCHRAUBENSATZ	LS - SCREWS KIT	KIT TORNILLOS - LS
18	435137	10	VALVOLA	SOUPAPE	VENTIL	VALVE	VALVULA
19	435188	1	ASTA ATTIVAZIONE	TIGE ACTIVATION	BETÄTIGUNG STANGE	ACTIVATION ROD	VARILLA ACTIVAC.
20	435225	1	KIT GUARNIZIONE	KIT JOINT	DICHTSATZ	SEAL KIT	KIT JUNTAS
A	435235	1	ELEM. STAB. COMPLETO	ELEM. STAB. COMPL.	STUETZARMSTEUERVENTIL	COMPL. OUTRIGGER ELEM	EL. GATOS COMPLETO
B	435237	1	ELEM. ROTAZ. COMPL.	ELEM. ROTATION COMPL.	SCHWENKENSTEUERVENTIL	COMPL. SLEWING ELEM.	EL. GIRO COMPLETO
C	435238	1	ELEM. COLONNA COMPL.	ELEM. COLONNE COMPL.	SAULENSTEUERVENTIL	COMPL. COLUMN ELEM.	EL. COLUMNA COMPL.
D	435239	1	ELEM. MENSOLA COMPL.	ELEM. 1ER BRAS COMPL.	HUBRAHMENSTEUERVENTIL	COMPL. MAIN BOOM ELEM	EL. PRIMER BRAZO ART.
E	435241	1	ELEM. SFILO BR. COMPL.	ELEM.EXT.FLECHE COM.	AUSLEGER AUSZ. VENTIL	COMPL. BOOM EXT. ELEM	EL. EXTENSION BRAZOS
F	435242	1	ELEMENTO ATTIVAZIONE	ELEMENT ACTIVATION	BETÄTIGUNSELEMENT	ACTIVAT. ELEMENT	ELEMENTO ACTIVAC.

DISTRIBUTORE HAWE 6 ELEMENTI - 197469 - (24 V)

** Distributeur HAWE avec 6 éléments - 24 V*
** HAWE -Steuerventilblock mit 6 Elementen - 24 V*
** HAWE control valve block with 6 elements - 24 V*
** Distribuidor HAWE 6 elementos - 24 V*

TAV. GN.06.01A

matr. G.A23.0417

PM 12,5
PM 12,5 S
PM 13,5 SP

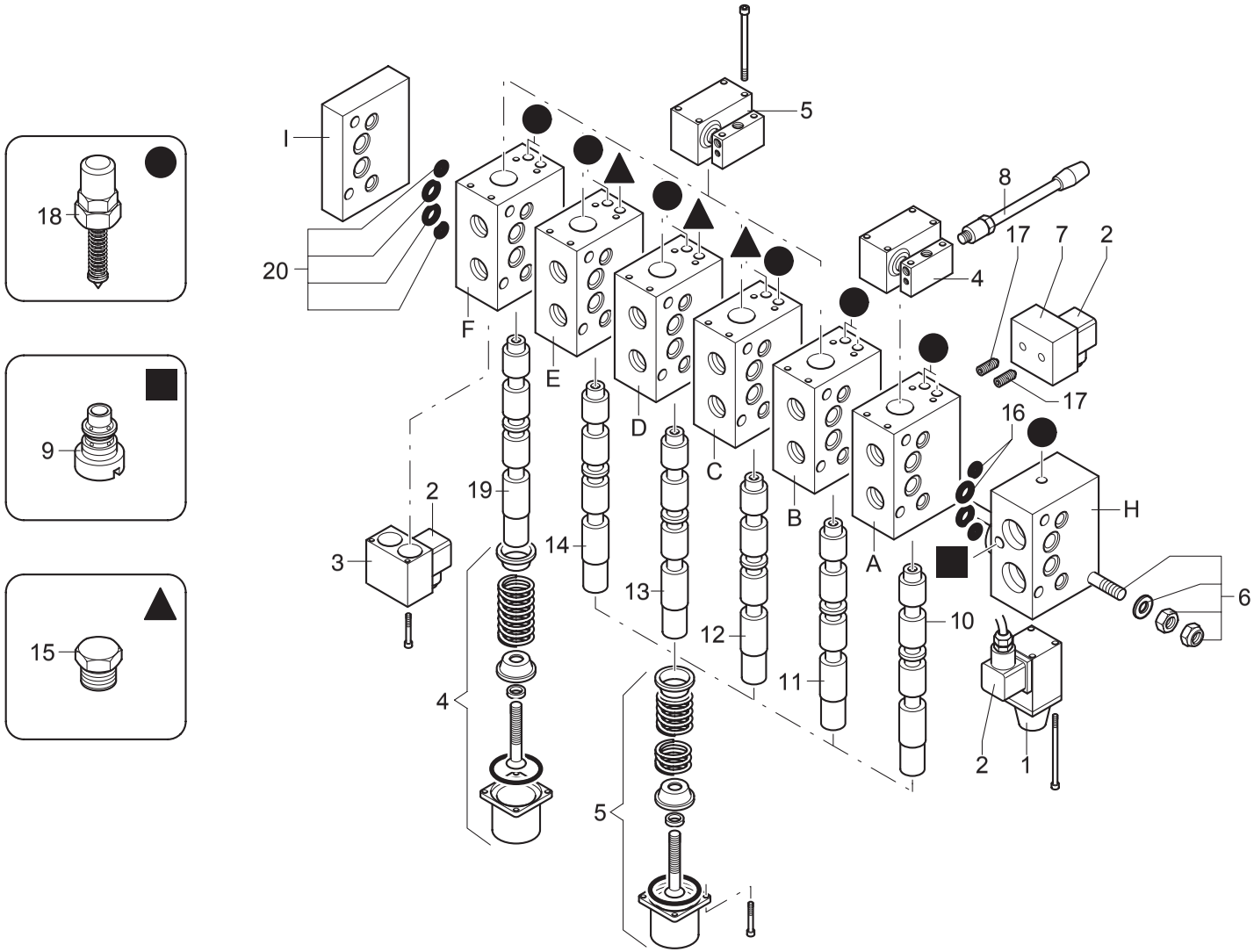

UN01-R-0405-00-M-C-13

UNISTUDIO - Moden

POS.	N°CODICE	Q	DESCRIZIONE	DESIGNATION	BENENNUNG	DESCRIPTION	DENOMINACIONES
H	435234	1	FIANCATA COMPLETA	COTE	SEITENWAND	SIDE PANEL	LADO
I	435208	1	FIANCATA COMPLETA	COTE	SEITENWAND	SIDE PANEL	LADO

DISTRIBUTORE HAWE 7 ELEMENTI - 197331 - (24 V)

** Distributeur HAWE avec 7 éléments - 24 V*
** HAWE-Steuerventilblock mit 7 Elementen - 24 V*
** HAWE control valve block with 7 elements - 24 V*
** Distribuidor HAWE 7 elementos - 24 V*

TAV. GN.07.01

matr. G.A23.0001

PM 12,5
PM 12,5 S
PM 13,5 SP

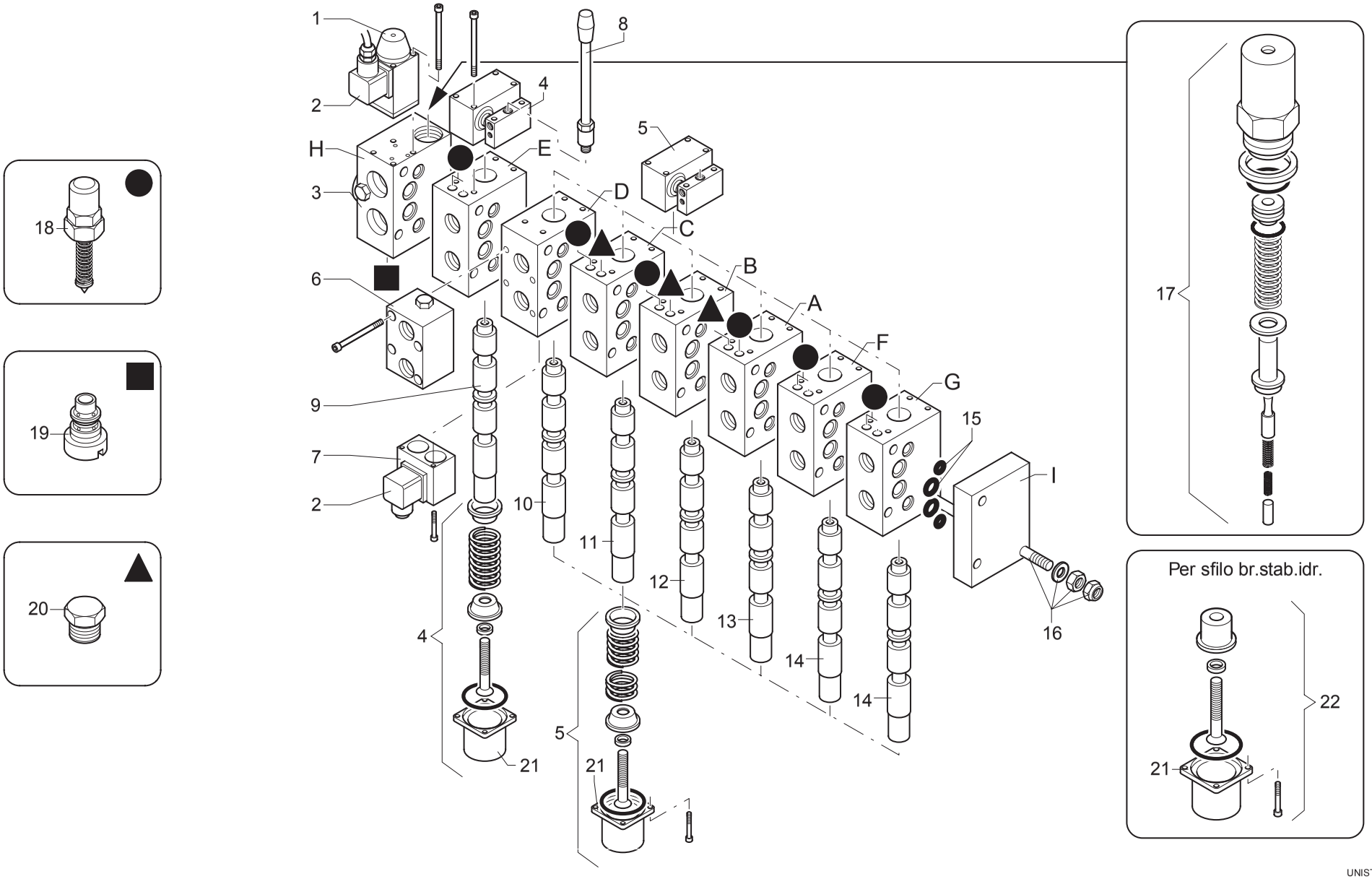

UNISTUDIO - Moden

POS.	N°CODICE	Q	DESCRIZIONE	DESIGNATION	BENENNUNG	DESCRIPTION	DENOMINACIONES
1	435127	1	SOLENOIDE	SOLENOIDE	SOLENOID	SOLENOID	SOLENOIDE
2	435128	7	CONNETTORE	CONNECTEUR	VERBINDER	CONNECTOR	CONECTOR
3	435130	1	CORPO	CORPS	GEHAUSE	BODY	CUERPO
4	435134	1	ORGANO DI MANOVRA	DISPOSITIF MOUVEMENT	SCHALT VORRICHTUNG	MOTION DEVICE	ORGANO DE MANOVRA
5	435151	6	ORGANO DI MANOVRA	DISPOSITIF MOUVEMENT	SCHALT VORRICHTUNG	MOTION DEVICE	ORGANO DE MANOVRA
6	435139	1	VALVOLA	SOUPAPE	VENTIL	VALVE	VALVULA
7	435141	6	SOLENOIDE	SOLENOIDE	SOLENOID	SOLENOID	SOLENOIDE
8	435133	1	LEVA	LEVIER	HEBEL	LEVER	PALANCA
9	435136	1	ASTA STAB.	TIGE	STANGE	ROD	VASTAGO
10	435138	1	ASTA ROTAZ.	TIGE	STANGE	ROD	VASTAGO
11	435142	1	ASTA COLONNA	TIGE	STANGE	ROD	VASTAGO
12	435144	1	ASTA MENSOLA	TIGE	STANGE	ROD	VASTAGO
13	435145	1	ASTA SFILO	TIGE	STANGE	ROD	VASTAGO
14	435153	2	ASTA 1°-2° ATTIVAZIONE	TIGE	STANGE	ROD	VASTAGO
15	435132	8	KIT GUARNIZIONE	KIT JOINT	DICHTSATZ	SEAL KIT	KIT JUNTAS
16	435112	1	KIT TIRANTE	KIT TIRANT	ZUGSTANGENSATZ	TIEROD KIT	KIT ESPARRAGO
17	435129	1	VALVOLA	SOUPAPE	VENTIL	VALVE	VALVULA
18	435137	9	VALVOLA	SOUPAPE	VENTIL	VALVE	VALVULA
19	435131	1	VALVOLA	SOUPAPE	VENTIL	VALVE	VALVULA
20	435143	3	TAPPO	BOUCHON	VERSCHLUSS	CAP	TAPON
21	435162	7	KIT COPERCHIO	KIT COUVERCLE	DECKELKIT	COVER KITTTT	KIT TAPA
22	435110	1	KIT ATTACCO LEVA	KIT ATTACHE LEVIER	HEBELVERBINDUNGSKIT	LEVER COUPLING KIT	KIT CONEXION PALANCA
A	435124	1	ELEM. SFILO BR. COMPL.	ELEM.EXT.FLECHE COM.	AUSLEGER AUSZ. VENTIL	COMPL. BOOM EXT. ELEM	EL. EXTENSION BRAZOS
B	435123	1	ELEM. MENSOLA COMPL.	ELEM. 1ER BRAS COMPL.	HUBRAHMENSTEUERVENTIL	COMPL. MAIN BOOM ELEM	EL. PRIMER BRAZO ART.
C	435122	1	ELEMENTO COLONNA COM.	ELEM. COLONNE COMPL.	SAULENSTEUERVENTIL	COMPL. COLUMN ELEM.	EL. COLUMNA COMPLETO
D	435121	1	ELEM. ROTAZ. COMP.	ELEM. ROTATION COMPL.	SCHWENKENSTEUERVENTIL	COMPL. SLEWING ELEM.	EL. GIRO COMPLETO

DISTRIBUTORE HAWE 7 ELEMENTI - 197331 - (24 V)

** Distributeur HAWE avec 7 éléments - 24 V*
** HAWE control valve block with 7 elements - 24 V*
** HAWE-Steuerventilblock mit 7 Elementen - 24 V*
** Distribuidor HAWE 7 elementos - 24 V*

TAV. GN.07.01

matr. G.A23.0001

PM 12,5
PM 12,5 S
PM 13,5 SP

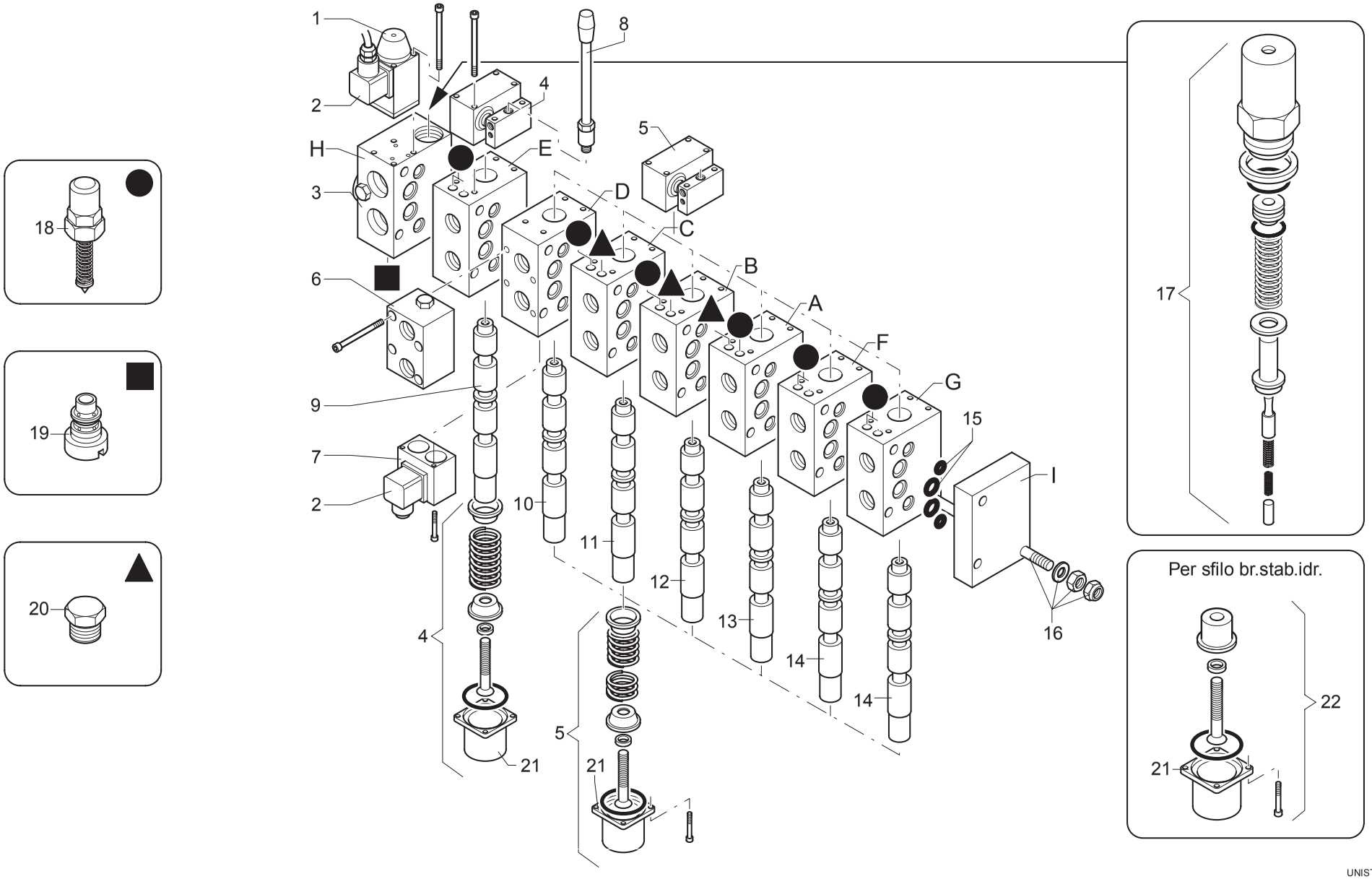

UNISTUDIO - Moden

POS.	N°CODICE	Q	DESCRIZIONE	DESIGNATION	BENENNUNG	DESCRIPTION	DENOMINACIONES
E	435120	1	ELEM. STAB. COMPLETO	ELEM. STAB. COMPL.	STUETZARMSTEUERVENTIL	COMPL. OUTRIGGER ELEM	EL. GATOS COMPLETO
F	435152	1	ELEMENTO 1° ATT. COMPL.	ELEMENT	STEUERVENTIL	ELEMENT	ELEMENTO
G	435152	1	ELEM. 2° ATT. COMPL.	ELEMENT	STEUERVENTIL	ELEMENT	ELEMENTO
H	435119	1	FIANCATA COMPLETA	COTE	SEITENWAND	SIDE PANEL	LADO
I	435125	1	FIANCATA COMPLETA	COTE	SEITENWAND	SIDE PANEL	LADO

DISTRIBUTORE HAWE 7 ELEMENTI - 197470 - (24 V)

** Distributeur HAWE avec 7 éléments - 24 V*
** HAWE-Steuerventilblock mit 7 Elementen - 24 V*
** HAWE control valve block with 7 elements - 24 V*
** Distribuidor HAWE 7 elementos - 24 V*

TAV. GN.07.01A

matr. G.A23.0417

PM 12,5
PM 12,5 S
PM 13,5 SP

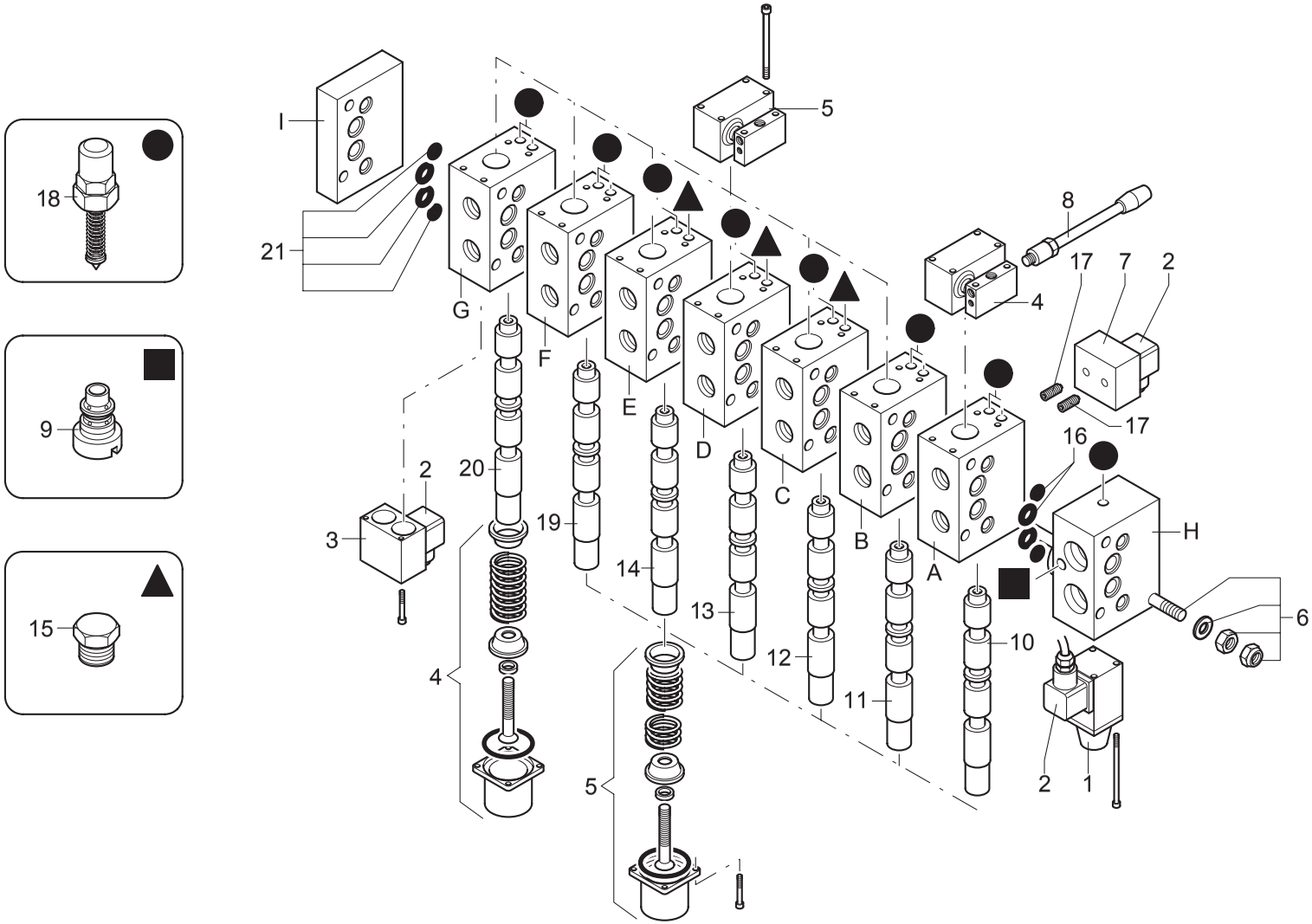

UN01-R-0406-00-M-C-13

POS.	N°CODICE	Q	DESCRIZIONE	DESIGNATION	BENENNUNG	DESCRIPTION	DENOMINACIONES
1	435174	1	ELETTROVALVOLA	ELECTROVANNE	ELEKTROVENTIL	ELECTROVALVE	ELECTRO-VALVULA
2	435128	8	CONNETTORE	CONNECTEUR	VERBINDER	CONNECTOR	CONECTOR
3	435198	6	SOLENOIDE	SOLENOIDE	SOLENOID	SOLENOID	SOLENOIDE
4	435195	1	ORGANO DI MANOVRA	DISPOSITIF MOUVEMENT	SCHALT VORRICHTUNG	MOTION DEVICE	ORGANO DE MANOVRA
5	435200	6	ORGANO DI MANOVRA	DISPOSITIF MOUVEMENT	SCHALT VORRICHTUNG	MOTION DEVICE	ORGANO DE MANOVRA
6	435211	1	KIT TIRANTE	KIT TIRANT	ZUGSTANGENSATZ	TIEROD KIT	KIT ESPARRAGO
7	435182	1	ELETTROVALVOLA	ELECTROVANNE	ELEKTROVENTIL	ELECTROVALVE	ELECTRO-VALVULA
8	435175	1	LEVA	LEVIER	HEBEL	LEVER	PALANCA
9	435191	1	VALVOLA	SOUPAPE	VENTIL	VALVE	VALVULA
10	435236	1	ASTA STAB.	TIGE	STANGE	ROD	VASTAGO
11	435189	1	ASTA ROTAZ.	TIGE	STANGE	ROD	VASTAGO
12	435185	1	ASTA COLONNA	TIGE	STANGE	ROD	VASTAGO
13	435240	1	ASTA MENSOLA	TIGE	STANGE	ROD	VASTAGO
14	435187	1	ASTA SFILO	TIGE	STANGE	ROD	VASTAGO
15	435143	3	TAPPO	BOUCHON	VERSCHLUSS	CAP	TAPON
16	435192	1	KIT GUARNIZIONE	KIT JOINT	DICHTSATZ	SEAL KIT	KIT JUNTAS
17	435196	1	KIT VITI - LS	KIT VIS - LS	LS - SCHRAUBENSATZ	LS - SCREWS KIT	KIT TORNILLOS - LS
18	435137	12	VALVOLA	SOUPAPE	VENTIL	VALVE	VALVULA
19	435188	1	ASTA ATTIVAZIONE	TIGE ACTIVATION	BETÄTIGUNG STANGE	ACTIVATION ROD	VARILLA ACTIVAC.
20	435188	1	ASTA ATTIVAZIONE	TIGE ACTIVATION	BETÄTIGUNG STANGE	ACTIVATION ROD	VARILLA ACTIVAC.
21	435225	7	KIT GUARNIZIONE	KIT JOINT	DICHTSATZ	SEAL KIT	KIT JUNTAS
A	435235	1	ELEM. STAB. COMPLETO	ELEM. STAB. COMPL.	STUETZARMSTEUERVENTIL	COMPL. OUTRIGGER ELEM	EL. GATOS COMPLETO
B	435237	1	ELEM. ROTAZ. COMPL.	ELEM. ROTATION COMPL.	SCHWENKENSTEUERVENTIL	COMPL. SLEWING ELEM.	EL. GIRO COMPLETO
C	435238	1	ELEM. COLONNA COM.	ELEM. COLONNE COMPL.	SAULENSTEUERVENTIL	COMPL. COLUMN ELEM.	EL. COLUMNA COMPL.
D	435239	1	ELEM. MENSOLA COMPL.	ELEM. 1ER BRAS COMPL.	HUBRAHMENSTEUERVENTIL	COMPL. MAIN BOOM ELEM	EL. PRIMER BRAZO ART.
E	435241	1	ELEM. SFILO BR. COMPL.	ELEM.EXT.FLECHE COM.	AUSLEGER AUSZ. VENTIL	COMPL. BOOM EXT. ELEM	EL. EXTENSION BRAZOS

DISTRIBUTORE HAWE 7 ELEMENTI - 197470 - (24 V)

** Distributeur HAWE avec 7 éléments - 24 V*
** HAWE control valve block with 7 elements - 24 V*
** HAWE-Steuerventilblock mit 7 Elementen - 24 V*
** Distribuidor HAWE 7 elementos - 24 V*

TAV. GN.07.01A

matr. G.A23.0417

PM 12,5
PM 12,5 S
PM 13,5 SP

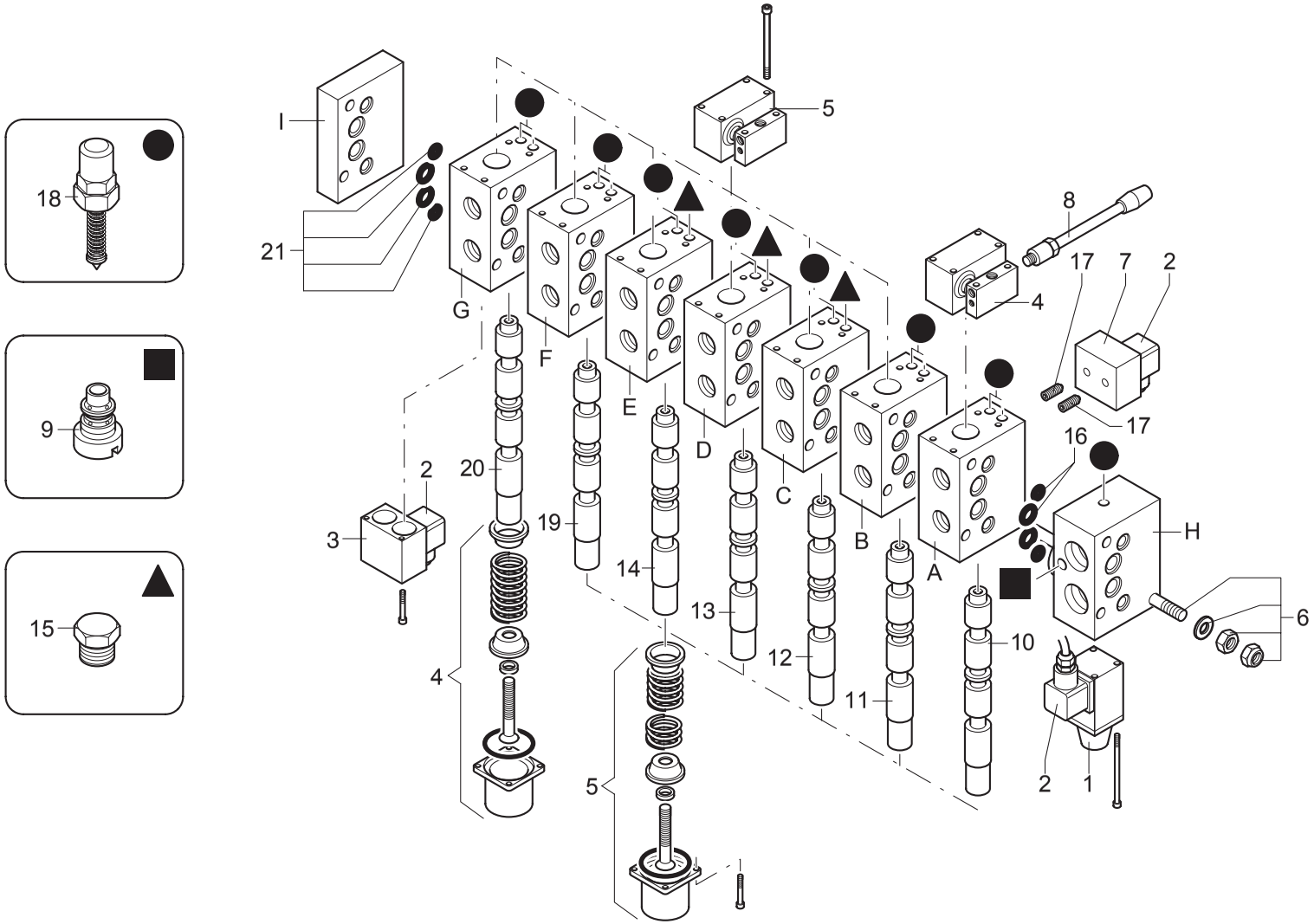

UN01-R-0406-00-M-C-13

POS.	N°CODICE	Q	DESCRIZIONE	DESIGNATION	BENENNUNG	DESCRIPTION	DENOMINACIONES
F	435242	1	ELEMENTO ATTIVAZIONE	ELEMENT ACTIVATION	BETÄTIGUNSELEMENT	ACTIVAT. ELEMENT	ELEMENTO ACTIVAC.
G	435242	1	ELEMENTO ATTIVAZIONE	ELEMENT ACTIVATION	BETÄTIGUNSELEMENT	ACTIVAT. ELEMENT	ELEMENTO ACTIVAC.
H	435234	1	FIANCATA COMPLETA	COTE	SEITENWAND	SIDE PANEL	LADO
I	435208	1	FIANCATA COMPLETA	COTE	SEITENWAND	SIDE PANEL	LADO

DISTRIBUTORE HAWE 5 ELEMENTI - 197351- (12 V)

** Distributeur HAWE avec 5 éléments - 12 V*
** HAWE-Steuerventilblock mit 5 Elementen - 12 V*
** HAWE control valve block with 5 elements - 12 V*
** Distribuidor HAWE 5 elementos - 12 V*

TAV. GN.09.01

matr. G.A23.0001

PM 12,5
PM 12,5 S
PM 13,5 SP

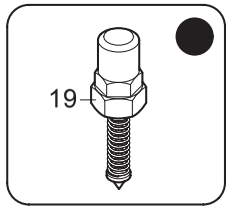

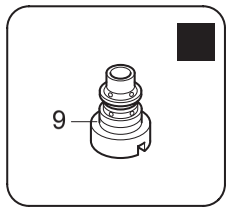

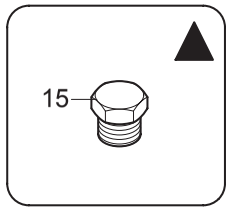

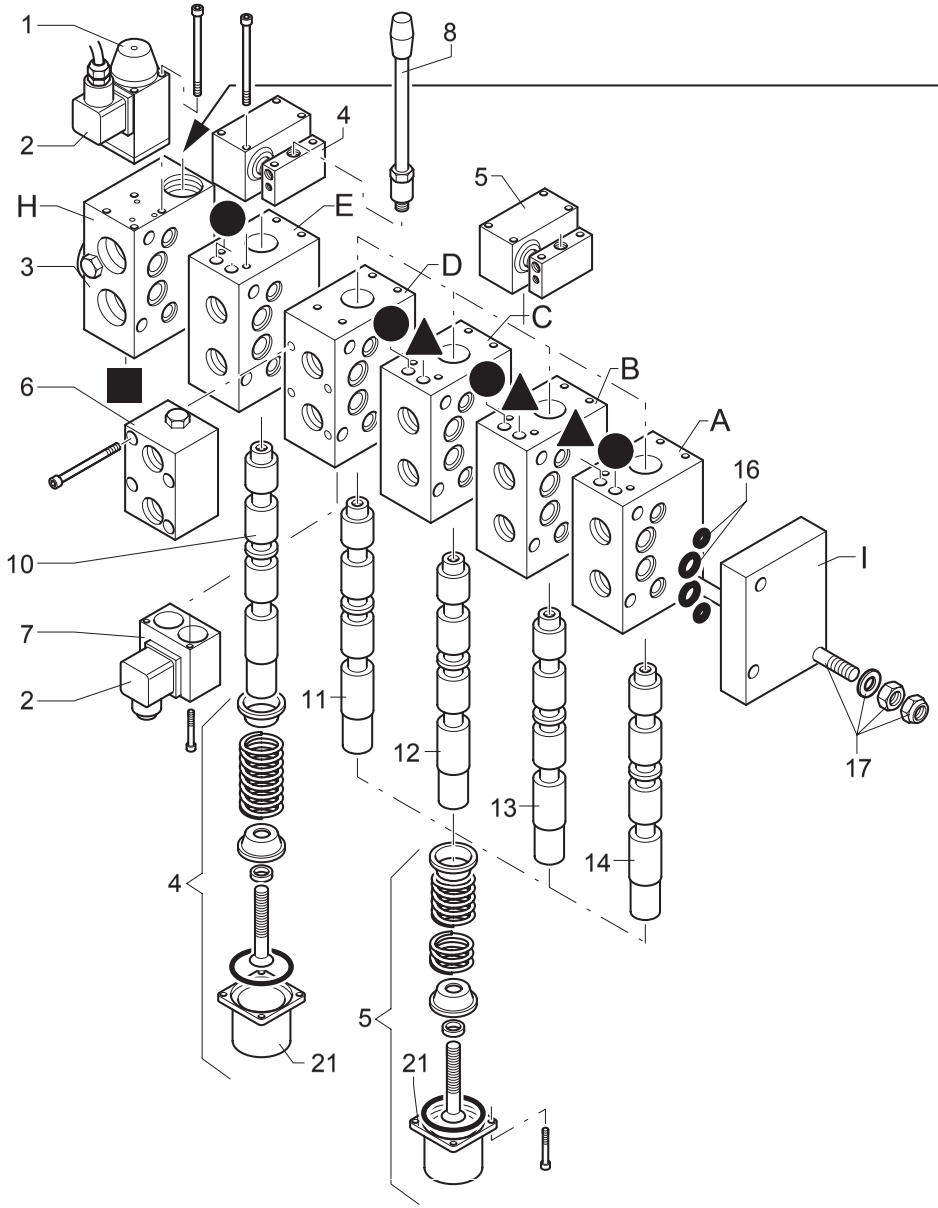

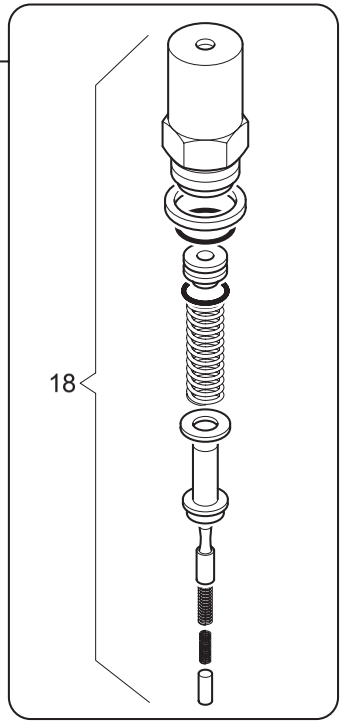

Per sfilo br.stab.idr.

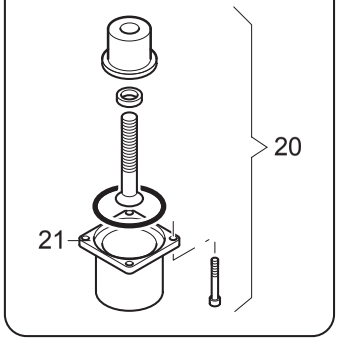

UNISTUDIO - Moden

POS.	N°CODICE	Q	DESCRIZIONE	DESIGNATION	BENENNUNG	DESCRIPTION	DENOMINACIONES
1	435159	1	SOLENOIDE	SOLENOIDE	SOLENOID	SOLENOID	SOLENOIDE
2	435128	5	CONNETTORE	CONNECTEUR	VERBINDER	CONNECTOR	CONECTOR
3	435130	1	CORPO	CORPS	GEHAUSE	BODY	CUERPO
4	435134	1	ORGANO DI MANOVRA	DISPOSITIF MOUVEMENT	SCHALT VORRICHTUNG	MOTION DEVICE	ORGANO DE MANOVRA
5	435151	4	ORGANO DI MANOVRA	DISPOSITIF MOUVEMENT	SCHALT VORRICHTUNG	MOTION DEVICE	ORGANO DE MANOVRA
6	435139	1	VALVOLA	SOUPAPE	VENTIL	VALVE	VALVULA
7	435160	4	SOLENOIDE	SOLENOIDE	SOLENOID	SOLENOID	SOLENOIDE
8	435133	1	LEVA	LEVIER	HEBEL	LEVER	PALANCA
9	435131	1	VALVOLA	SOUPAPE	VENTIL	VALVE	VALVULA
10	435136	1	ASTA STAB.	TIGE	STANGE	ROD	VASTAGO
11	435138	1	ASTA ROTAZ.	TIGE	STANGE	ROD	VASTAGO
12	435142	1	ASTA COLONNA	TIGE	STANGE	ROD	VASTAGO
13	435144	1	ASTA MENSOLA	TIGE	STANGE	ROD	VASTAGO
14	435145	1	ASTA SFILO	TIGE	STANGE	ROD	VASTAGO
15	435143	3	TAPPO	BOUCHON	VERSCHLUSS	CAP	TAPON
16	435132	6	KIT GUARNIZIONE	KIT JOINT	DICHTSATZ	SEAL KIT	KIT JUNTAS
17	435126	1	KIT TIRANTE	KIT TIRANT	ZUGSTANGENSATZ	TIEROD KIT	KIT ESPARRAGO
18	435129	1	VALVOLA	SOUPAPE	VENTIL	VALVE	VALVULA
19	435137	5	VALVOLA	SOUPAPE	VENTIL	VALVE	VALVULA
20	435110	1	KIT ATTACCO LEVA	KIT ATTACHE LEVIER	HEBELVERBINDUNGSKIT	LEVER COUPLING KIT	KIT CONEXION PALANCA
21	435162	5	KIT COPERCHIO	KIT COUVERCLE	DECKELKIT	COVER KITTTT	KIT TAPA
A	435157	1	ELEM. SFILO BR. COMPL.	ELEM.EXT.FLECHE COM.	AUSLEGER AUSZ. VENTIL	COMPL. BOOM EXT. ELEM	EL. EXTENSION BRAZOS
B	435156	1	ELEM. MENSOLA COMPL.	ELEM. 1ER BRAS COMPL.	HUBRAHMENSTEUERVENTIL	COMPL. MAIN BOOM ELEM	EL. PRIMER BRAZO ART.
C	435155	1	ELEMENTO COLONNA COM.	ELEM. COLONNE COMPL.	SAULENSTEUERVENTIL	COMPL. COLUMN ELEM.	EL. COLUMNA COMPLETO
D	435154	1	ELEM. ROTAZ. COMP.	ELEM. ROTATION COMPL.	SCHWENKENSTEUERVENTIL	COMPL. SLEWING ELEM.	EL. GIRO COMPLETO
E	435120	1	ELEM. STAB. COMPLETO	ELEM. STAB. COMPL.	STUETZARMSTEUERVENTIL	COMPL. OUTRIGGER ELEM	EL. GATOS COMPLETO

DISTRIBUTORE HAWE 5 ELEMENTI - 197351- (12 V)

** Distributeur HAWE avec 5 éléments - 12 V*
** HAWE-Steuerventilblock mit 5 Elementen - 12 V*
** HAWE control valve block with 5 elements - 12 V*
** Distribuidor HAWE 5 elementos - 12 V*

TAV. GN.09.01

matr. G.A23.0001

PM 12,5
PM 12,5 S
PM 13,5 SP

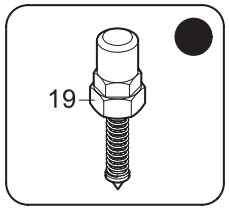

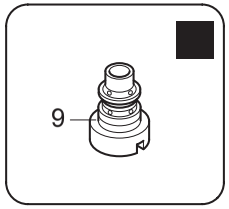

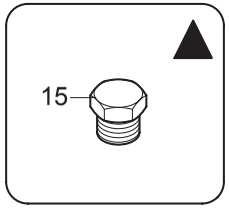

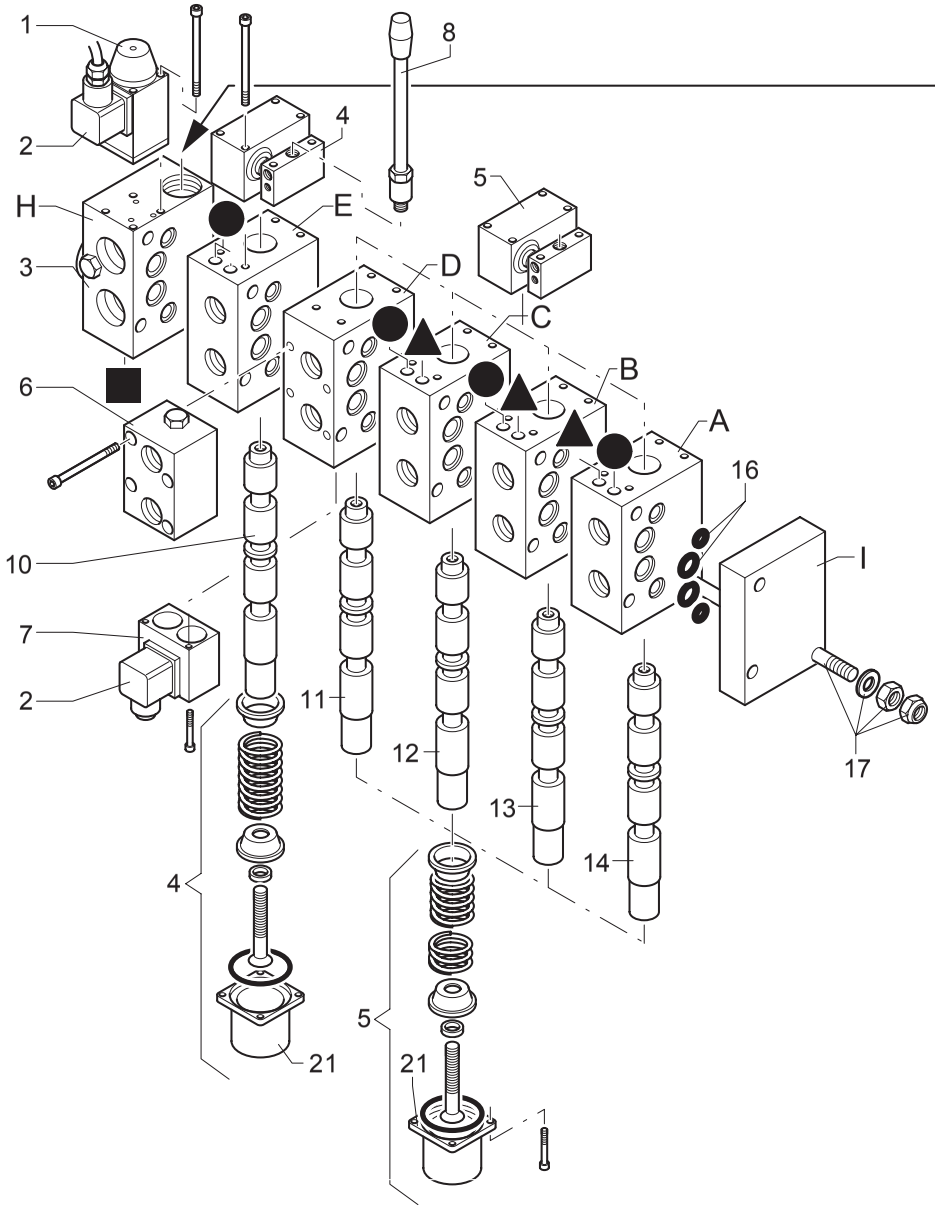

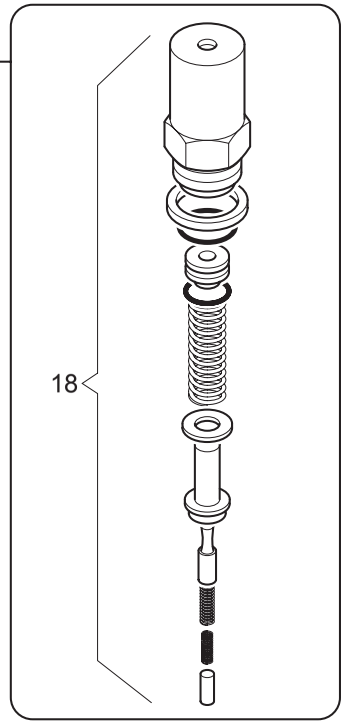

Per sfilo br.stab.idr.

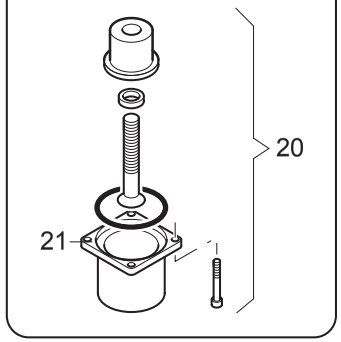

UNISTUDIO - Moden

POS.	N°CODICE	Q	DESCRIZIONE	DESIGNATION	BENENNUNG	DESCRIPTION	DENOMINACIONES
H	435140	1	FIANCATA COMPLETA	COTE	SEITENWAND	SIDE PANEL	LADO
I	435125	1	FIANCATA COMPLETA	COTE	SEITENWAND	SIDE PANEL	LADO

DISTRIBUTORE HAWE 6 ELEMENTI - 197352- (12 V)

** Distributeur HAWE avec 6 éléments - 12 V*
** HAWE -Steuerventilblock mit 6 Elementen - 12 V*
** HAWE control valve block with 6 elements - 12 V*
** Distribuidor HAWE 6 elementos - 12 V*

TAV. GN.10.01

matr. G.A23.0001

PM 12,5
PM 12,5 S
PM 13,5 SP

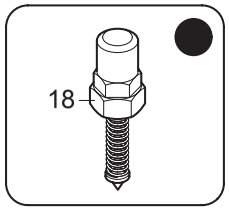

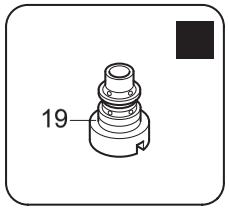

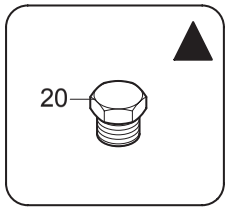

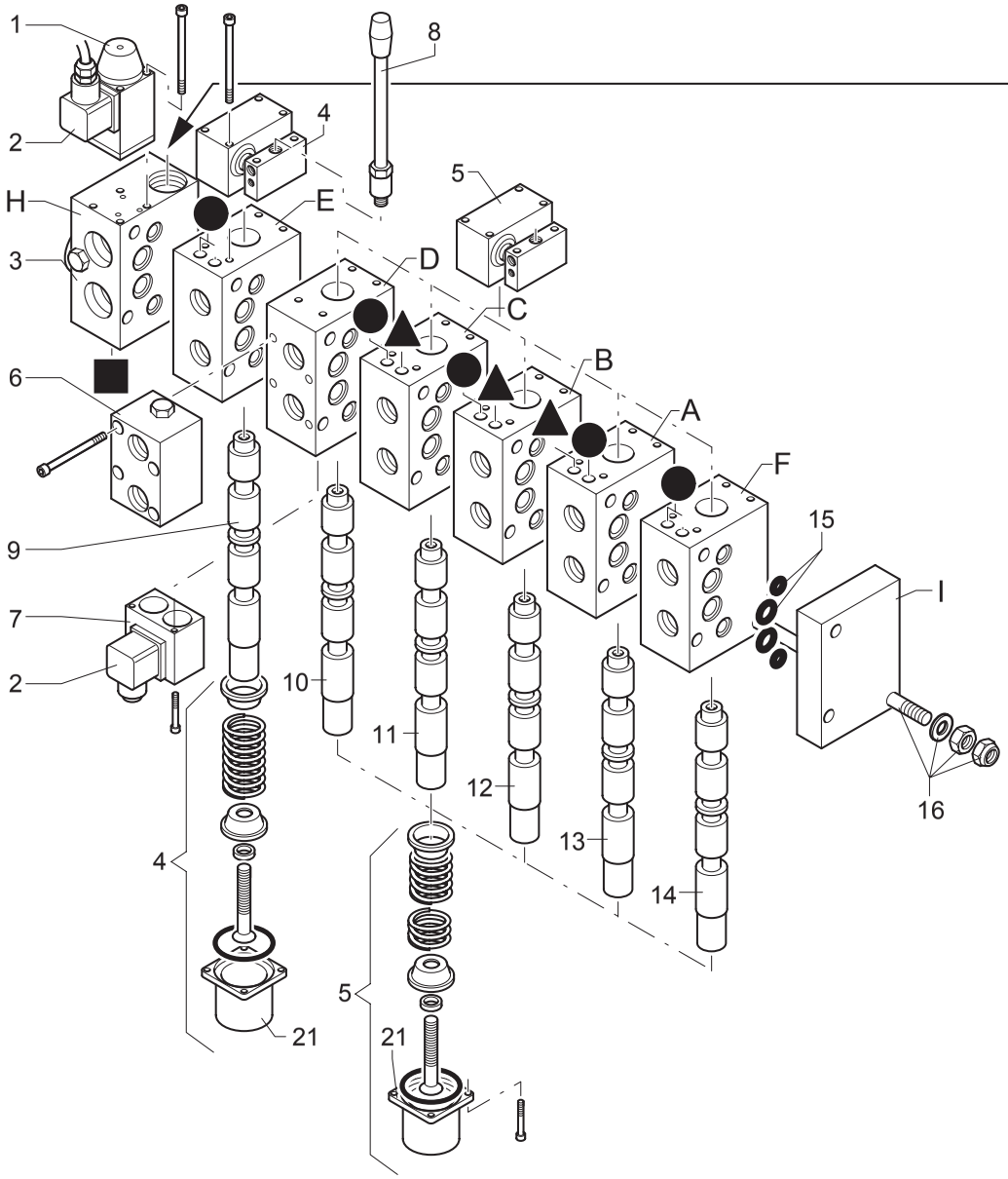

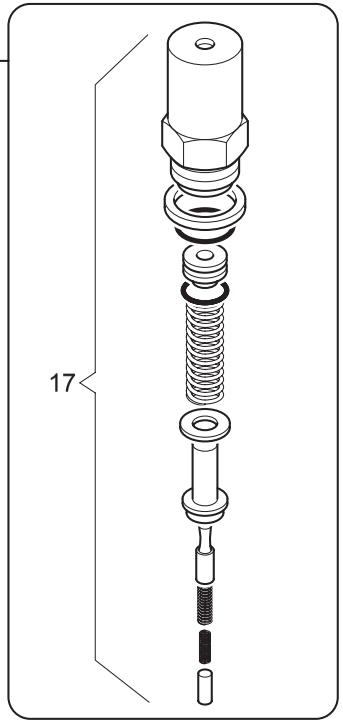

Per sfilo br.stab.idr.

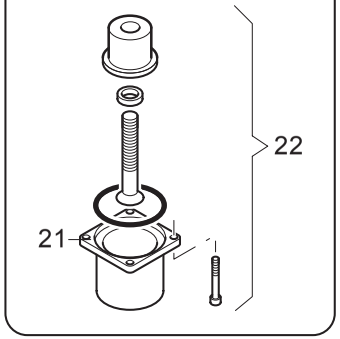

UNISTUDIO - Moden

POS.	N°CODICE	Q	DESCRIZIONE	DESIGNATION	BENENNUNG	DESCRIPTION	DENOMINACIONES
1	435127	1	SOLENOIDE	SOLENOIDE	SOLENOID	SOLENOID	SOLENOIDE
2	435128	6	CONNETTORE	CONNECTEUR	VERBINDER	CONNECTOR	CONECTOR
3	435130	1	CORPO	CORPS	GEHAUSE	BODY	CUERPO
4	435134	1	ORGANO DI MANOVRA	DISPOSITIF MOUVEMENT	SCHALT VORRICHTUNG	MOTION DEVICE	ORGANO DE MANOVRA
5	435151	5	ORGANO DI MANOVRA	DISPOSITIF MOUVEMENT	SCHALT VORRICHTUNG	MOTION DEVICE	ORGANO DE MANOVRA
6	435139	1	VALVOLA	SOUPAPE	VENTIL	VALVE	VALVULA
7	435141	5	SOLENOIDE	SOLENOIDE	SOLENOID	SOLENOID	SOLENOIDE
8	435133	1	LEVA	LEVIER	HEBEL	LEVER	PALANCA
9	435136	1	ASTA STAB.	TIGE	STANGE	ROD	VASTAGO
10	435138	1	ASTA ROTAZ.	TIGE	STANGE	ROD	VASTAGO
11	435142	1	ASTA COLONNA	TIGE	STANGE	ROD	VASTAGO
12	435144	1	ASTA MENSOLA	TIGE	STANGE	ROD	VASTAGO
13	435145	1	ASTA SFILO	TIGE	STANGE	ROD	VASTAGO
14	435153	1	ASTA 1°-2° ATTIVAZIONE	TIGE	STANGE	ROD	VASTAGO
15	435132	7	KIT GUARNIZIONE	KIT JOINT	DICHTSATZ	SEAL KIT	KIT JUNTAS
16	435109	1	KIT TIRANTE	KIT TIRANT	ZUGSTANGENSATZ	TIEROD KIT	KIT ESPARRAGO
17	435129	1	VALVOLA	SOUPAPE	VENTIL	VALVE	VALVULA
18	435137	7	VALVOLA	SOUPAPE	VENTIL	VALVE	VALVULA
19	435131	1	VALVOLA	SOUPAPE	VENTIL	VALVE	VALVULA
20	435143	3	TAPPO	BOUCHON	VERSCHLUSS	CAP	TAPON
21	435162	6	KIT COPERCHIO	KIT COUVERCLE	DECKELKIT	COVER KITTTT	KIT TAPA
22	435110	1	KIT ATTACCO LEVA	KIT ATTACHE LEVIER	HEBELVERBINDUNGSKIT	LEVER COUPLING KIT	KIT CONEXION PALANCA
A	435157	1	ELEM. SFILO BR. COMPL.	ELEM.EXT.FLECHE COM.	AUSLEGER AUSZ. VENTIL	COMPL. BOOM EXT. ELEM	EL. EXTENSION BRAZOS
B	435156	1	ELEM. MENSOLA COMPL.	ELEM. 1ER BRAS COMPL.	HUBRAHMENSTEUERVENTIL	COMPL. MAIN BOOM ELEM	EL. PRIMER BRAZO ART.
C	435155	1	ELEMENTO COLONNA COM.	ELEM. COLONNE COMPL.	SAULENSTEUERVENTIL	COMPL. COLUMN ELEM.	EL. COLUMNA COMPLETO
D	435154	1	ELEM. ROTAZ. COMP.	ELEM. ROTATION COMPL.	SCHWENKENSTEUERVENTIL	COMPL. SLEWING ELEM.	EL. GIRO COMPLETO

DISTRIBUTORE HAWE 6 ELEMENTI - 197352- (12 V)

** Distributeur HAWE avec 6 éléments - 12 V*
** HAWE -Steuerventilblock mit 6 Elementen - 12 V*
** HAWE control valve block with 6 elements - 12 V*
** Distribuidor HAWE 6 elementos - 12 V*

TAV. GN.10.01

matr. G.A23.0001

PM 12,5
PM 12,5 S
PM 13,5 SP

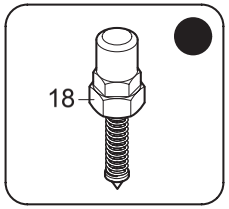

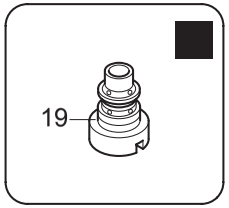

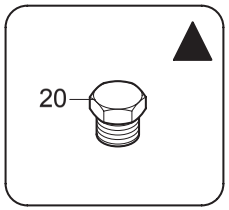

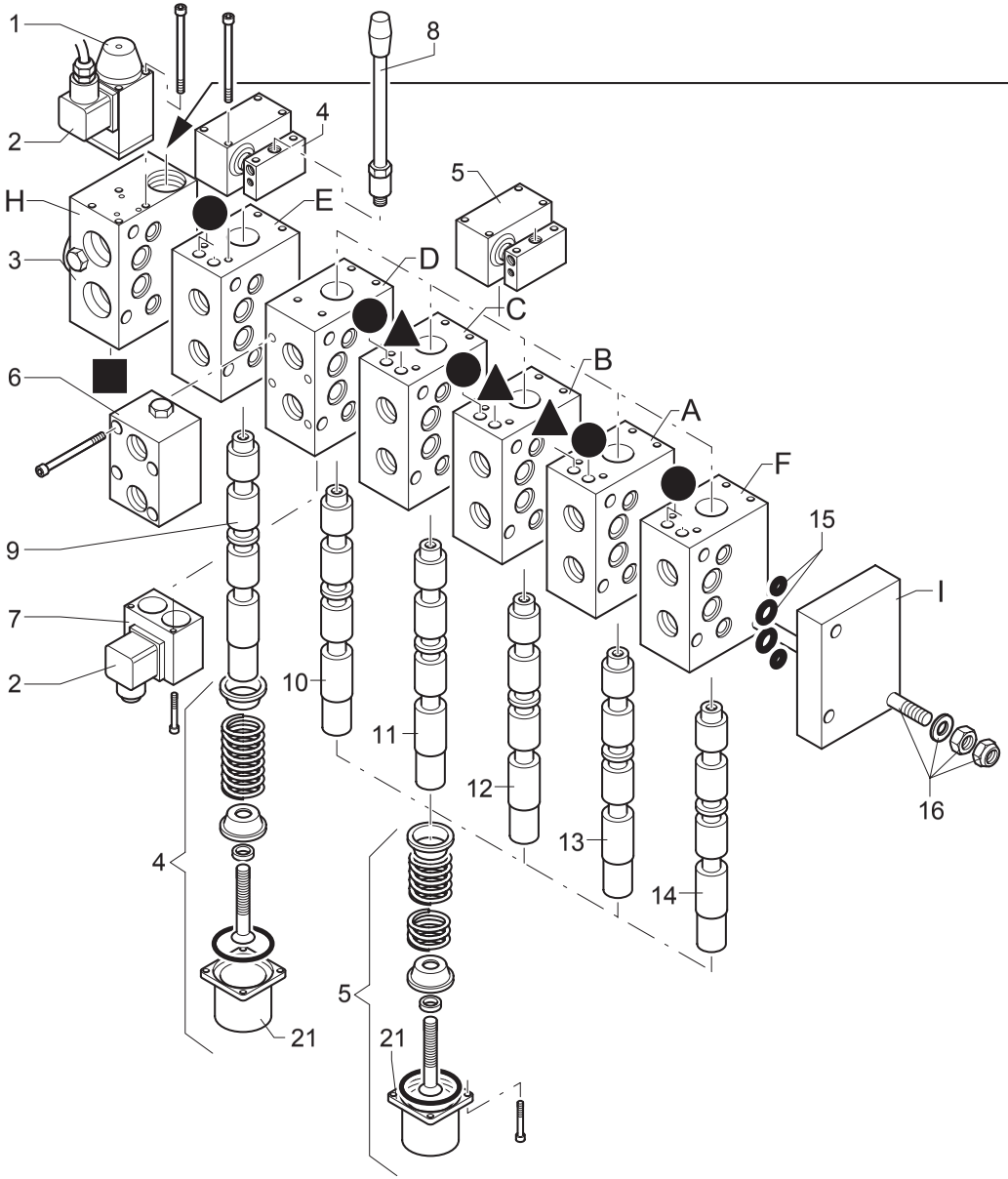

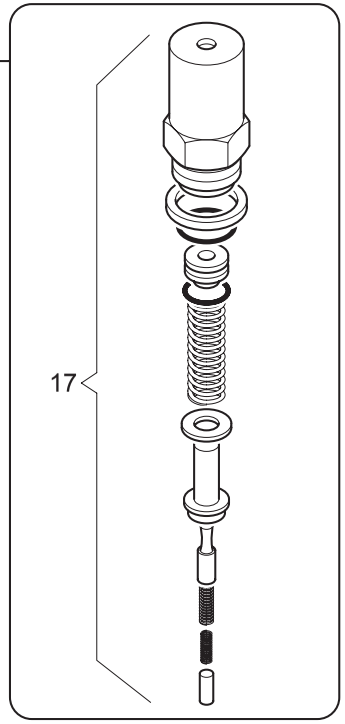

Per sfilo br.stab.idr.

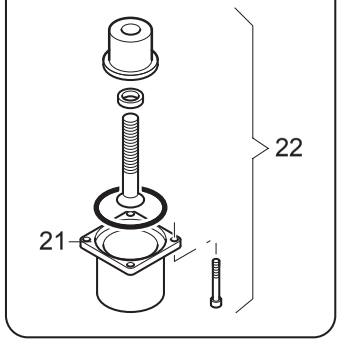

UNISTUDIO - Moden

POS.	N°CODICE	Q	DESCRIZIONE	DESIGNATION	BENENNUNG	DESCRIPTION	DENOMINACIONES
E	435120	1	ELEM. STAB. COMPLETO	ELEM. STAB. COMPL.	STUETZARMSTEUERVENTIL	COMPL. OUTRIGGER ELEM	EL. GATOS COMPLETO
F	435158	1	ELEMENTO 1° ATT. COMPL.	ELEMENT	STEUERVENTIL	ELEMENT	ELEMENTO
H	435140	1	FIANCATA COMPLETA	COTE	SEITENWAND	SIDE PANEL	LADO
I	435125	1	FIANCATA COMPLETA	COTE	SEITENWAND	SIDE PANEL	LADO

DISTRIBUTORE HAWE 7 ELEMENTI - 197353- (12 V)

** Distributeur HAWE avec 7 éléments - 12 V*
** HAWE-Steuerventilblock mit 7,Elementen - 12 V*
** HAWE control valve block with 7 elements - 12 V*
** Distribuidor HAWE 7 elementos - 12 V*

TAV. GN.11.01

matr. G.A23.0001

PM 12,5
PM 12,5 S
PM 13,5 SP

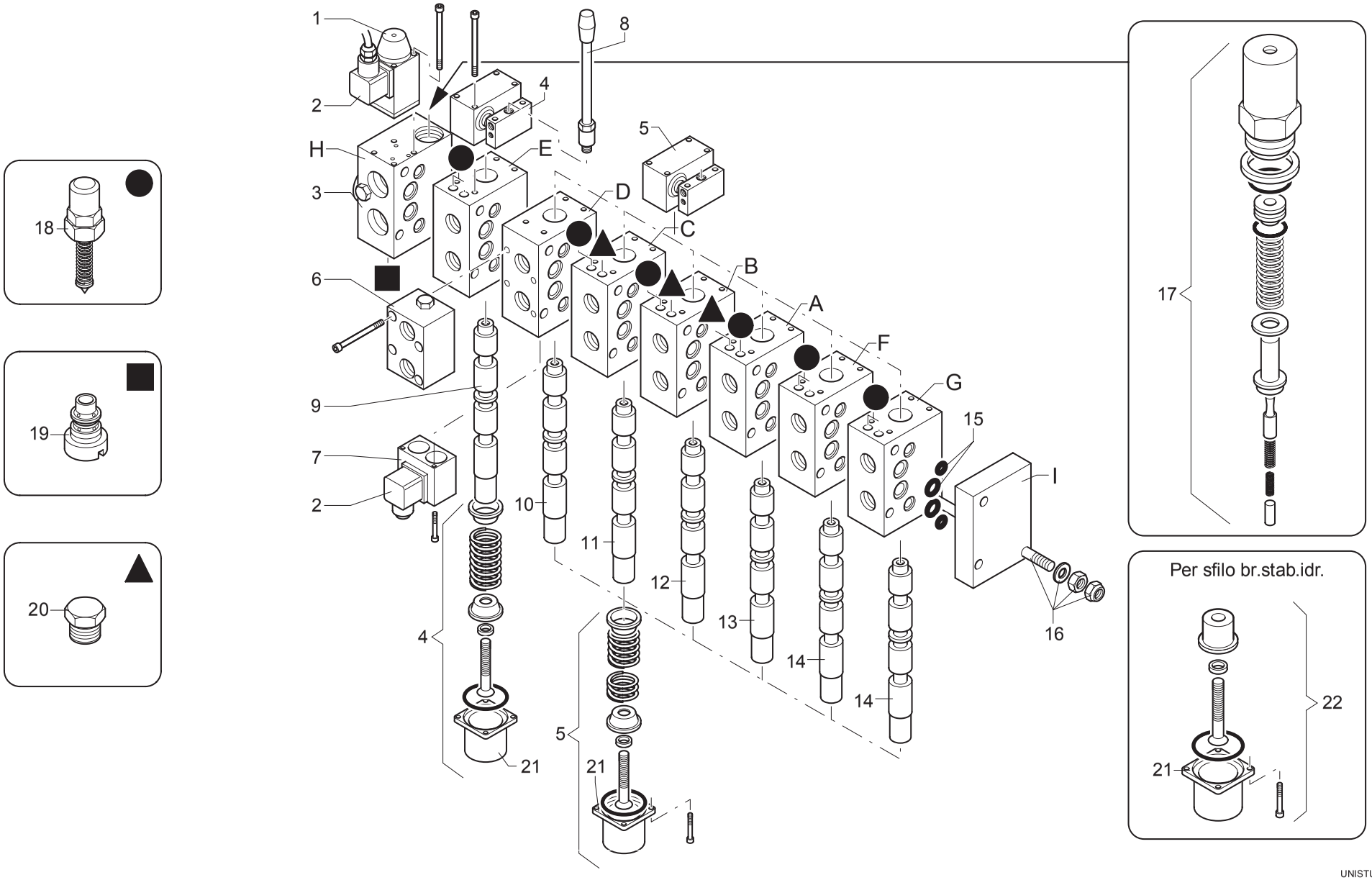

UNISTUDIO - Moden

POS.	N°CODICE	Q	DESCRIZIONE	DESIGNATION	BENENNUNG	DESCRIPTION	DENOMINACIONES
1	435127	1	SOLENOIDE	SOLENOIDE	SOLENOID	SOLENOID	SOLENOIDE
2	435128	7	CONNETTORE	CONNECTEUR	VERBINDER	CONNECTOR	CONECTOR
3	435130	1	CORPO	CORPS	GEHAUSE	BODY	CUERPO
4	435134	1	ORGANO DI MANOVRA	DISPOSITIF MOUVEMENT	SCHALT VORRICHTUNG	MOTION DEVICE	ORGANO DE MANOVRA
5	435151	6	ORGANO DI MANOVRA	DISPOSITIF MOUVEMENT	SCHALT VORRICHTUNG	MOTION DEVICE	ORGANO DE MANOVRA
6	435139	1	VALVOLA	SOUPAPE	VENTIL	VALVE	VALVULA
7	435141	6	SOLENOIDE	SOLENOIDE	SOLENOID	SOLENOID	SOLENOIDE
8	435133	1	LEVA	LEVIER	HEBEL	LEVER	PALANCA
9	435136	1	ASTA STAB.	TIGE	STANGE	ROD	VASTAGO
10	435138	1	ASTA ROTAZ.	TIGE	STANGE	ROD	VASTAGO
11	435142	1	ASTA COLONNA	TIGE	STANGE	ROD	VASTAGO
12	435144	1	ASTA MENSOLA	TIGE	STANGE	ROD	VASTAGO
13	435145	1	ASTA SFILO	TIGE	STANGE	ROD	VASTAGO
14	435153	2	ASTA 1°-2° ATTIVAZIONE	TIGE	STANGE	ROD	VASTAGO
15	435132	8	KIT GUARNIZIONE	KIT JOINT	DICHTSATZ	SEAL KIT	KIT JUNTAS
16	435112	1	KIT TIRANTE	KIT TIRANT	ZUGSTANGENSATZ	TIEROD KIT	KIT ESPARRAGO
17	435129	1	VALVOLA	SOUPAPE	VENTIL	VALVE	VALVULA
18	435137	9	VALVOLA	SOUPAPE	VENTIL	VALVE	VALVULA
19	435131	1	VALVOLA	SOUPAPE	VENTIL	VALVE	VALVULA
20	435143	3	TAPPO	BOUCHON	VERSCHLUSS	CAP	TAPON
21	435162	7	KIT COPERCHIO	KIT COUVERCLE	DECKELKIT	COVER KITTTT	KIT TAPA
22	435110	1	KIT ATTACCO LEVA	KIT ATTACHE LEVIER	HEBELVERBINDUNGSKIT	LEVER COUPLING KIT	KIT CONEXION PALANCA
A	435157	1	ELEM. SFILO BR. COMPL.	ELEM.EXT.FLECHE COM.	AUSLEGER AUSZ. VENTIL	COMPL. BOOM EXT. ELEM	EL. EXTENSION BRAZOS
B	435156	1	ELEM. MENSOLA COMPL.	ELEM. 1ER BRAS COMPL.	HUBRAHMENSTEUERVENTIL	COMPL. MAIN BOOM ELEM	EL. PRIMER BRAZO ART.
C	435155	1	ELEMENTO COLONNA COM.	ELEM. COLONNE COMPL.	SAULENSTEUERVENTIL	COMPL. COLUMN ELEM.	EL. COLUMNA COMPLETO
D	435154	1	ELEM. ROTAZ. COMP.	ELEM. ROTATION COMPL.	SCHWENKENSTEUERVENTIL	COMPL. SLEWING ELEM.	EL. GIRO COMPLETO

DISTRIBUTORE HAWE 7 ELEMENTI - 197353- (12 V)

** Distributeur HAWE avec 7 éléments - 12 V*
** HAWE-Steuerventilblock mit 7,Elementen - 12 V*
** HAWE control valve block with 7 elements - 12 V*
** Distribuidor HAWE 7 elementos - 12 V*

TAV. GN.11.01

matr. G.A23.0001

PM 12,5
PM 12,5 S
PM 13,5 SP

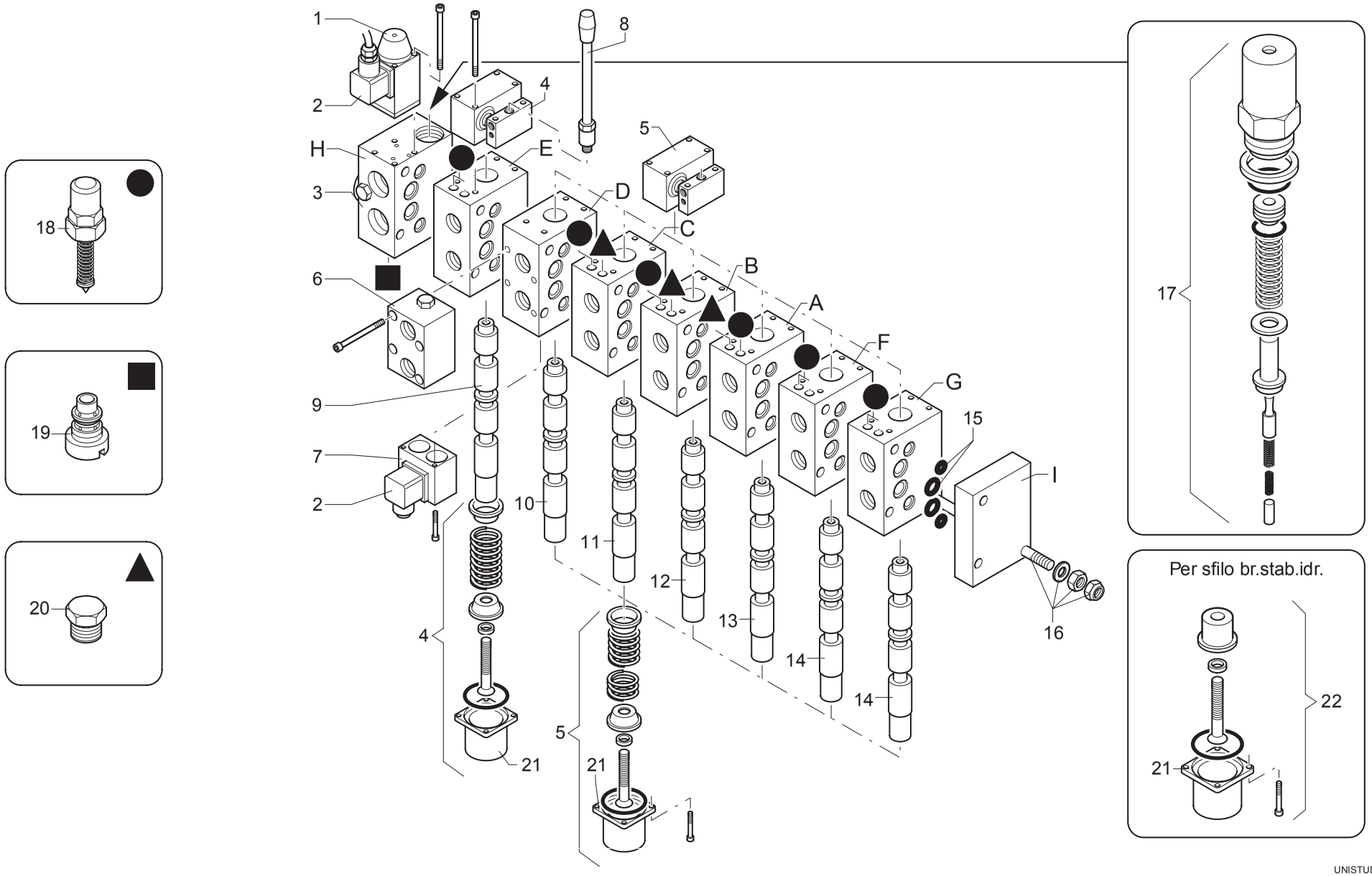

UNISTUDIO - Moden

POS.	N°CODICE	Q	DESCRIZIONE	DESIGNATION	BENENNUNG	DESCRIPTION	DENOMINACIONES
E	435120	1	ELEM. STAB. COMPLETO	ELEM. STAB. COMPL.	STUETZARMSTEUERVENTIL	COMPL. OUTRIGGER ELEM	EL. GATOS COMPLETO
F	435158	1	ELEMENTO 1° ATT. COMPL.	ELEMENT	STEUERVENTIL	ELEMENT	ELEMENTO
G	435158	1	ELEM. 2° ATT. COMPL.	ELEMENT	STEUERVENTIL	ELEMENT	ELEMENTO
H	435140	1	FIANCATA COMPLETA	COTE	SEITENWAND	SIDE PANEL	LADO
I	435125	1	FIANCATA COMPLETA	COTE	SEITENWAND	SIDE PANEL	LADO

TARGHETTE COMANDI

** Autocollants commandes*
** Control decals*
** Steuerungsschilder*
** Tarjetas para los mandos*

TAV. GO.01.01

matr. G.A23.0001

PM 12,5
PM 12,5 S
PM 13,5 SP

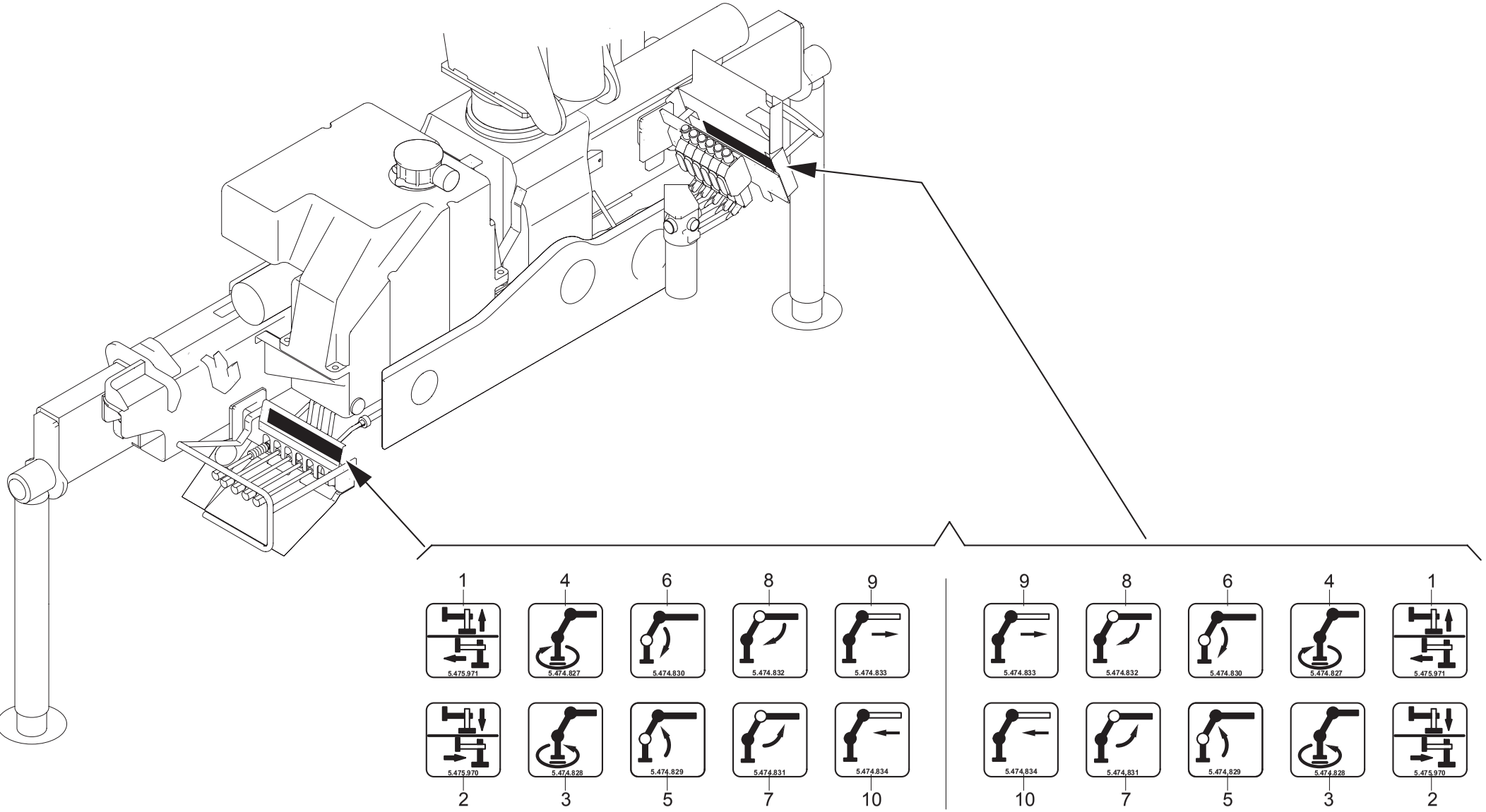

POS.	N°CODICE	Q	DESCRIZIONE	DESIGNATION	BENENNUNG	DESCRIPTION	DENOMINACIONES
1	475971	2	TARGHETTA	AUTOCOLLANTS	SCHILD	DECAL	ETIQUETA
2	475970	2	TARGHETTA	AUTOCOLLANTS	SCHILD	DECAL	ETIQUETA
3	474628	2	TARGHETTA	AUTOCOLLANTS	SCHILD	DECAL	ETIQUETA
4	474627	2	TARGHETTA	AUTOCOLLANTS	SCHILD	DECAL	ETIQUETA
5	474629	2	TARGHETTA	AUTOCOLLANTS	SCHILD	DECAL	ETIQUETA
6	474630	2	TARGHETTA	AUTOCOLLANTS	SCHILD	DECAL	ETIQUETA
7	474631	2	TARGHETTA	AUTOCOLLANTS	SCHILD	DECAL	ETIQUETA
8	474632	2	TARGHETTA	AUTOCOLLANTS	SCHILD	DECAL	ETIQUETA
9	474633	2	TARGHETTA	AUTOCOLLANTS	SCHILD	DECAL	ETIQUETA
10	474634	2	TARGHETTA	AUTOCOLLANTS	SCHILD	DECAL	ETIQUETA
11	289475	1	KIT TARGHETTA	KIT AUTOCOLLANTS	SCHILD SATZ	DECAL KIT	KIT ETIQUETA

TARGHETTE

* Autocollants
* Decals
* Schilder
* Etiquetas

TAV. GO.02.01

matr. G.A23.0001

PM 12,5

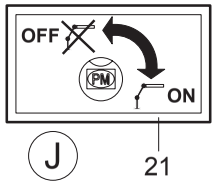

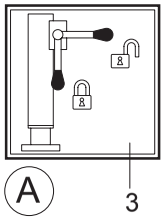

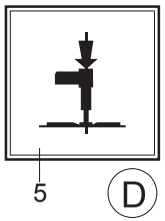

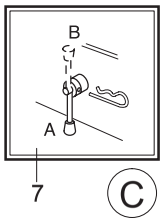

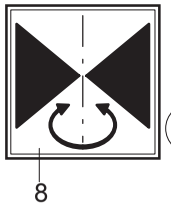

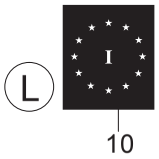

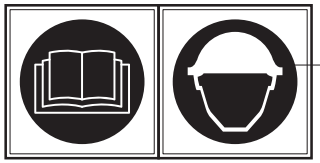

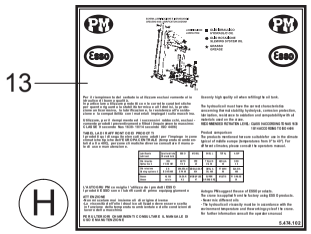

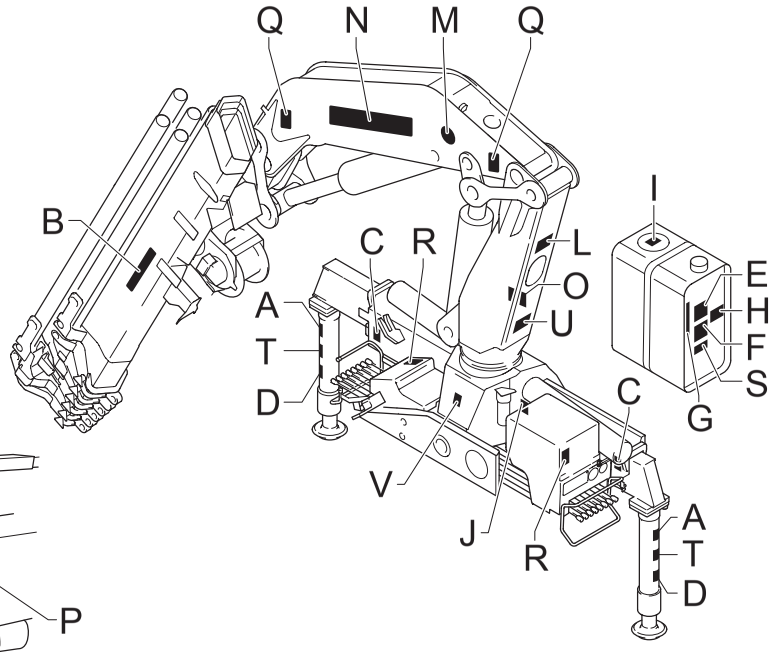

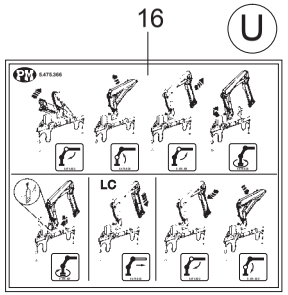

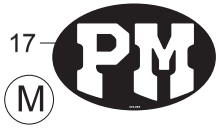

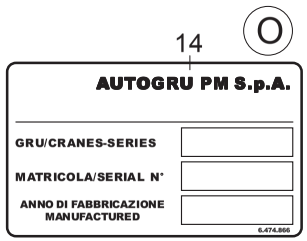

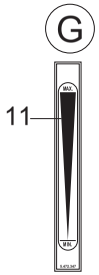

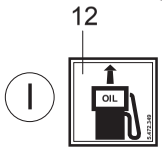

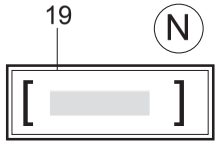

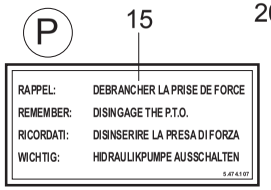

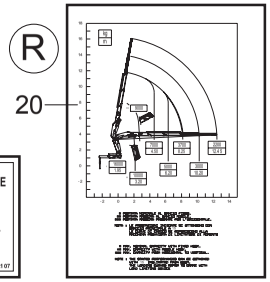

POS.		N°CODICE	Q	DESCRIZIONE	DESIGNATION	BENENNUNG	DESCRIPTION	DENOMINACIONES
1	X	478539	1	TARGHETTA	AUTOCOLLANTS	SCHILD	DECAL	ETIQUETA
2	X	478540	1	TARGHETTA	AUTOCOLLANTS	SCHILD	DECAL	ETIQUETA
3	■	478541	2	TARGHETTA	AUTOCOLLANTS	SCHILD	DECAL	ETIQUETA
4	■	478542	2	TARGHETTA	AUTOCOLLANTS	SCHILD	DECAL	ETIQUETA
5	■	478543	2	TARGHETTA	AUTOCOLLANTS	SCHILD	DECAL	ETIQUETA
6	■	478544	4	TARGHETTA	AUTOCOLLANTS	SCHILD	DECAL	ETIQUETA
7	■	478545	2	TARGHETTA	AUTOCOLLANTS	SCHILD	DECAL	ETIQUETA
8	X	478546	1	TARGHETTA	AUTOCOLLANTS	SCHILD	DECAL	ETIQUETA
9	X	478547	1	TARGHETTA	AUTOCOLLANTS	SCHILD	DECAL	ETIQUETA
10		472126	1	TARGHETTA	AUTOCOLLANTS	SCHILD	DECAL	ETIQUETA
11	○	472347	1	TARGHETTA	AUTOCOLLANTS	SCHILD	DECAL	ETIQUETA
12	○	472349	1	TARGHETTA	AUTOCOLLANTS	SCHILD	DECAL	ETIQUETA
13		474102	1	TARGHETTA	AUTOCOLLANTS	SCHILD	DECAL	ETIQUETA
14		474866	1	TARGHETTA	AUTOCOLLANTS	SCHILD	DECAL	ETIQUETA
15	■	474107	1	TARGHETTA	AUTOCOLLANTS	SCHILD	DECAL	ETIQUETA
16	○	475366	1	TARGHETTA	AUTOCOLLANTS	SCHILD	DECAL	ETIQUETA
17	○	472386	2	TARGHETTA	AUTOCOLLANTS	SCHILD	DECAL	ETIQUETA
18	○	478445	2	TARGHETTA	AUTOCOLLANTS	SCHILD	DECAL	ETIQUETA
19	/●✸▲□	478566	2	TARGHETTA	AUTOCOLLANTS	SCHILD	DECAL	ETIQUETA
20	●	478186	2	TARGHETTA (PM 12521)	AUTOCOLLANTS	SCHILD	DECAL	ETIQUETA
20	✸	478187	2	TARGHETTA (PM 12522)	AUTOCOLLANTS	SCHILD	DECAL	ETIQUETA
20	▲	478188	2	TARGHETTA (PM 12523)	AUTOCOLLANTS	SCHILD	DECAL	ETIQUETA
20	□	478189	2	TARGHETTA (PM 12524)	AUTOCOLLANTS	SCHILD	DECAL	ETIQUETA
20	/	478190	2	TARGHETTA (PM 12525)	AUTOCOLLANTS	SCHILD	DECAL	ETIQUETA
21	■	478065	1	TARGHETTA	AUTOCOLLANTS	SCHILD	DECAL	ETIQUETA

TARGHETTE

* Autocollants
* Decals
* Schilder
* Etiquetas

TAV. GO.02.01

matr. G.A23.0001

PM 12,5

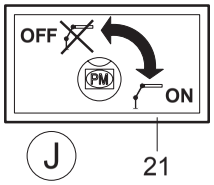

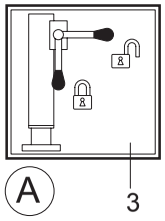

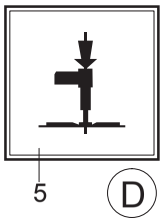

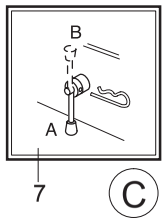

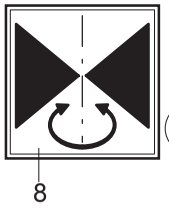

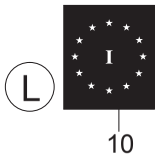

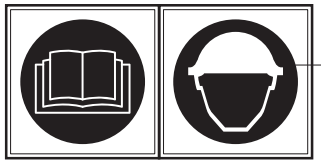

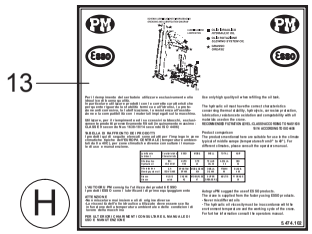

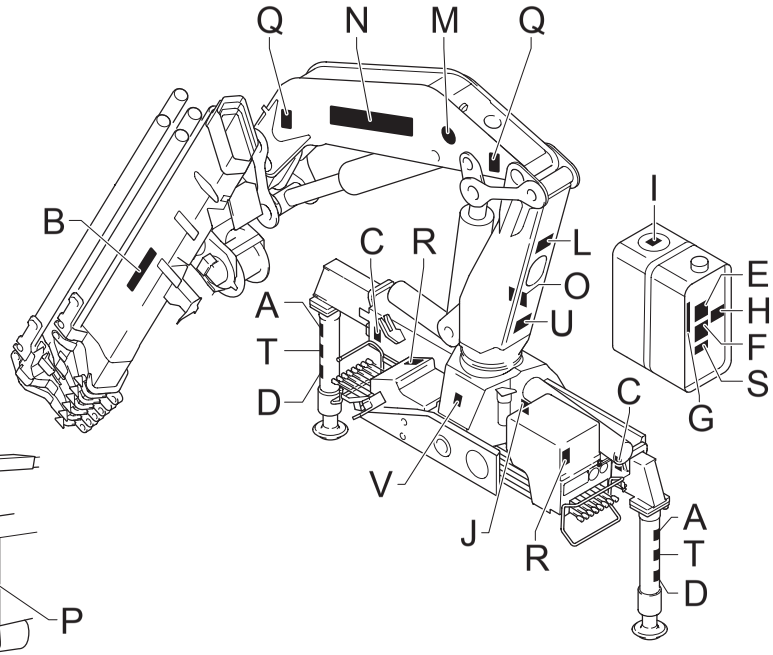

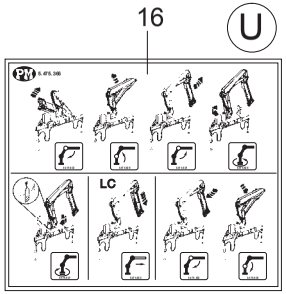

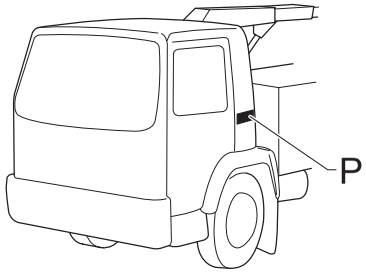

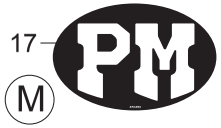

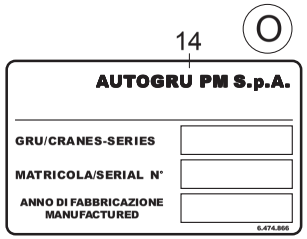

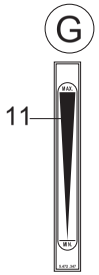

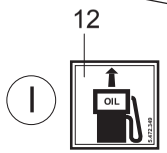

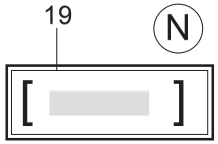

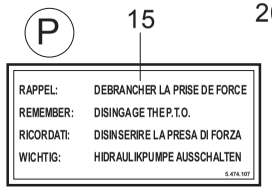

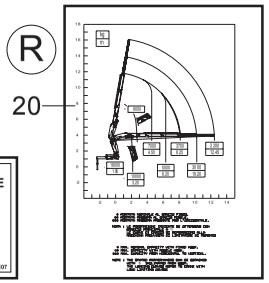

UNISTUDIO - Moden

POS.	N°CODICE	Q	DESCRIZIONE	DESIGNATION	BENENNUNG	DESCRIPTION	DENOMINACIONES
■	289932		KIT TARGHETTA	KIT AUTOCOLLANTS	SCHILD SATZ	DECAL KIT	KIT ETIQUETA
○	289906		KIT TARGHETTA	KIT AUTOCOLLANTS	SCHILD SATZ	DECAL KIT	KIT ETIQUETA
X	289907		KIT TARGHETTA	KIT AUTOCOLLANTS	SCHILD SATZ	DECAL KIT	KIT ETIQUETA
●	289693		KIT TARGHETTA **(12521)**	KIT AUTOCOLLANTS **(12521)**	SCHILD SATZ **(12521)**	DECAL KIT **(12521)**	KIT ETIQUETA **(12521)**
✸	289694		KIT TARGHETTA **(12522)**	KIT AUTOCOLLANTS **(12522)**	SCHILD SATZ **(12522)**	DECAL KIT **(12522)**	KIT ETIQUETA **(12522)**
▲	289695		KIT TARGHETTA **(12523)**	KIT AUTOCOLLANTS **(12523)**	SCHILD SATZ **(12523)**	DECAL KIT **(12523)**	KIT ETIQUETA **(12523)**
□	289696		KIT TARGHETTA **(12524)**	KIT AUTOCOLLANTS **(12524)**	SCHILD SATZ **(12524)**	DECAL KIT **(12524)**	KIT ETIQUETA **(12524)**
/	289697		KIT TARGHETTA **(12525)**	KIT AUTOCOLLANTS **(12525)**	SCHILD SATZ **(12525)**	DECAL KIT **(12525)**	KIT ETIQUETA **(12525)**

Nota : ordinare solo i kit targhetta

Nota : ne commander que les kits plaque

Anmerkung : nur den Satz Schilder bestellen

Note : order only plate kits

Nota : ordenar sólo los kit tarjeta

TARGHETTE

** Autocollants*
** Decals*
** Schilder*
** Etiquetas*

TAV. GO.02.02

matr. G.A23.0001

PM 12,5 S

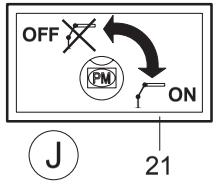

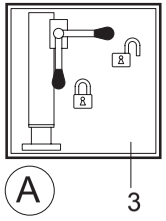

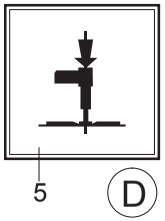

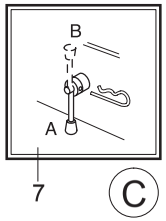

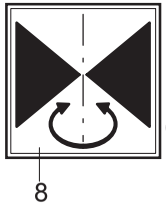

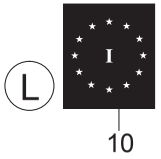

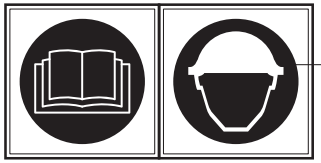

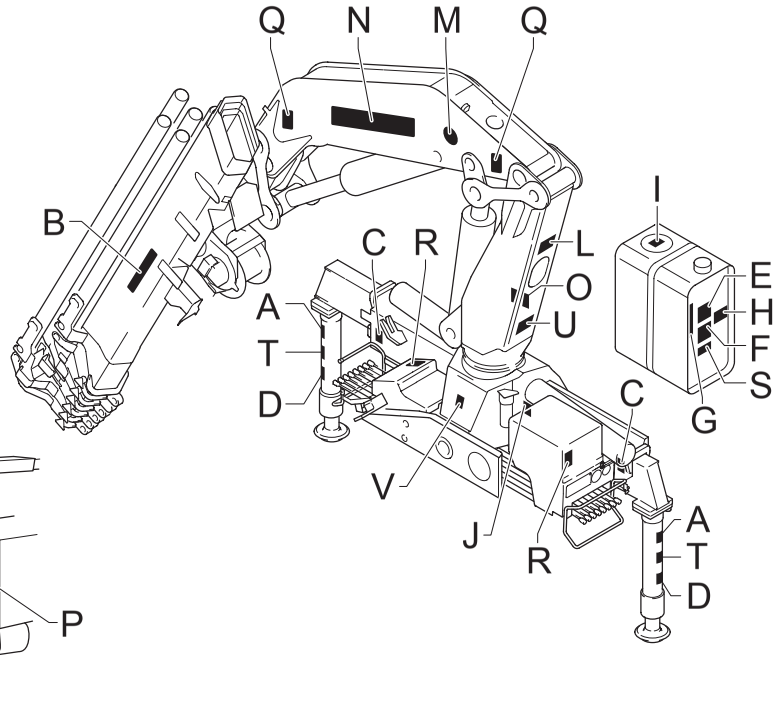

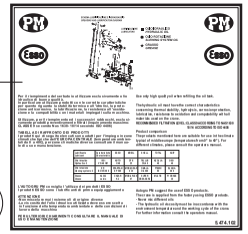

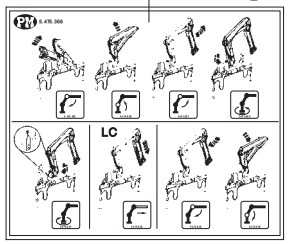

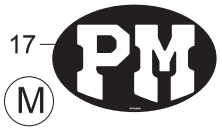

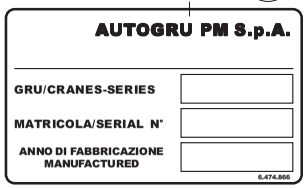

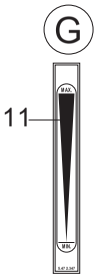

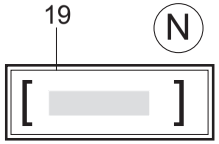

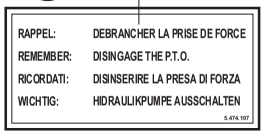

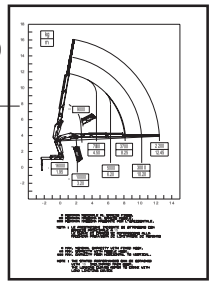

POS.		N°CODICE	Q	DESCRIZIONE	DESIGNATION	BENENNUNG	DESCRIPTION	DENOMINACIONES
1	X	478539	1	TARGHETTA	AUTOCOLLANTS	SCHILD	DECAL	ETIQUETA
2	X	478540	1	TARGHETTA	AUTOCOLLANTS	SCHILD	DECAL	ETIQUETA
3	■	478541	2	TARGHETTA	AUTOCOLLANTS	SCHILD	DECAL	ETIQUETA
4	■	478542	2	TARGHETTA	AUTOCOLLANTS	SCHILD	DECAL	ETIQUETA
5	■	478543	2	TARGHETTA	AUTOCOLLANTS	SCHILD	DECAL	ETIQUETA
6	■	478544	4	TARGHETTA	AUTOCOLLANTS	SCHILD	DECAL	ETIQUETA
7	■	478545	2	TARGHETTA	AUTOCOLLANTS	SCHILD	DECAL	ETIQUETA
8	X	478546	1	TARGHETTA	AUTOCOLLANTS	SCHILD	DECAL	ETIQUETA
9	X	478547	1	TARGHETTA	AUTOCOLLANTS	SCHILD	DECAL	ETIQUETA
10		472126	1	TARGHETTA	AUTOCOLLANTS	SCHILD	DECAL	ETIQUETA
11	○	472347	1	TARGHETTA	AUTOCOLLANTS	SCHILD	DECAL	ETIQUETA
12	○	472349	1	TARGHETTA	AUTOCOLLANTS	SCHILD	DECAL	ETIQUETA
13		474102	1	TARGHETTA	AUTOCOLLANTS	SCHILD	DECAL	ETIQUETA
14		474866	1	TARGHETTA	AUTOCOLLANTS	SCHILD	DECAL	ETIQUETA
15	■	474107	1	TARGHETTA	AUTOCOLLANTS	SCHILD	DECAL	ETIQUETA
16	○	475366	1	TARGHETTA	AUTOCOLLANTS	SCHILD	DECAL	ETIQUETA
17	○	472386	2	TARGHETTA	AUTOCOLLANTS	SCHILD	DECAL	ETIQUETA
18	○	478445	2	TARGHETTA	AUTOCOLLANTS	SCHILD	DECAL	ETIQUETA
19	/●✸▲□	478574	2	TARGHETTA	AUTOCOLLANTS	SCHILD	DECAL	ETIQUETA
20	●	478001	2	TARGHETTA (PM 12521 S)	AUTOCOLLANTS	SCHILD	DECAL	ETIQUETA
20	✸	478002	2	TARGHETTA (PM 12522 S)	AUTOCOLLANTS	SCHILD	DECAL	ETIQUETA
20	▲	478003	2	TARGHETTA (PM 12523 S)	AUTOCOLLANTS	SCHILD	DECAL	ETIQUETA
20	□	478004	2	TARGHETTA (PM 12524 S)	AUTOCOLLANTS	SCHILD	DECAL	ETIQUETA
20	/	478005	2	TARGHETTA (PM 12525 S)	AUTOCOLLANTS	SCHILD	DECAL	ETIQUETA
21	■	478065	1	TARGHETTA	AUTOCOLLANTS	SCHILD	DECAL	ETIQUETA

TARGHETTE

** Autocollants*
** Decals*
** Schilder*
** Etiquetas*

TAV. GO.02.02

matr. G.A23.0001

PM 12,5 S

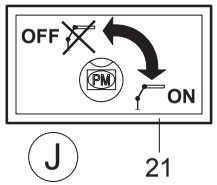

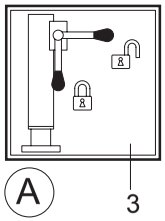

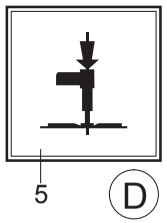

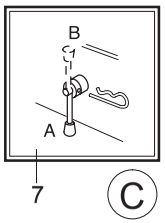

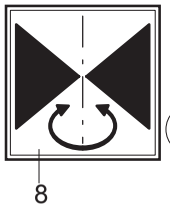

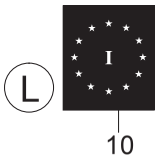

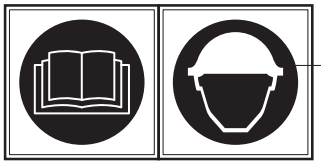

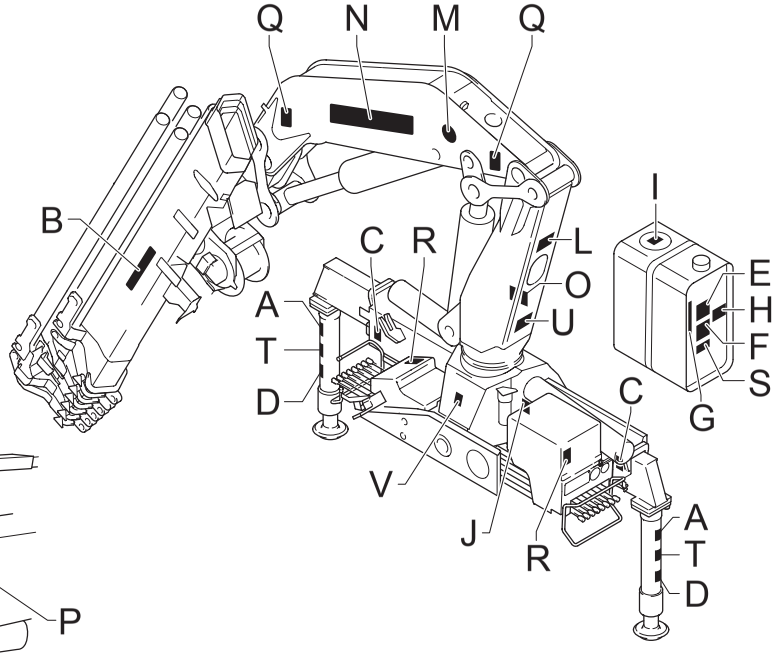

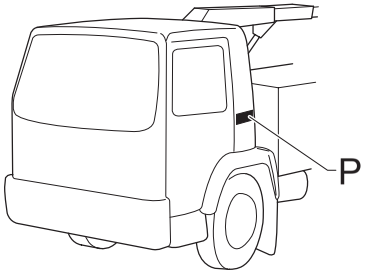

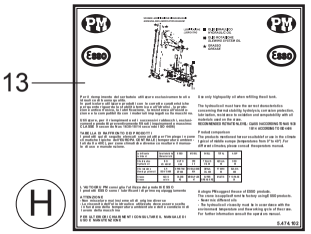

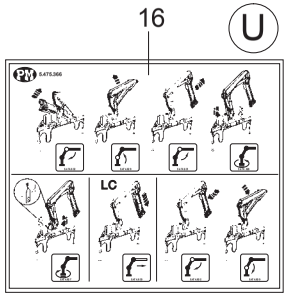

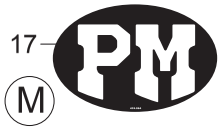

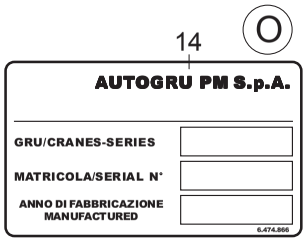

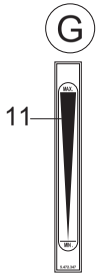

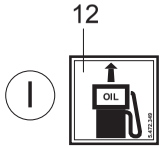

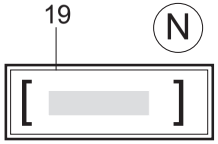

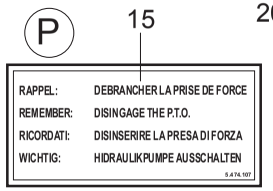

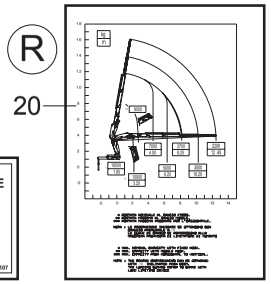

POS.	N°CODICE	Q	DESCRIZIONE	DESIGNATION	BENENNUNG	DESCRIPTION	DENOMINACIONES
■	289932		KIT TARGHETTA	KIT AUTOCOLLANTS	SCHILD SATZ	DECAL KIT	KIT ETIQUETA
○	289906		KIT TARGHETTA	KIT AUTOCOLLANTS	SCHILD SATZ	DECAL KIT	KIT ETIQUETA
X	289907		KIT TARGHETTA	KIT AUTOCOLLANTS	SCHILD SATZ	DECAL KIT	KIT ETIQUETA
●	289514		KIT TARGHETTA **(12521 S)**	KIT AUTOCOLLANTS **(12521 S)**	SCHILD SATZ **(12521 S)**	DECAL KIT **(12521 S)**	KIT ETIQUETA **(12521 S)**
✸	289515		KIT TARGHETTA **(12522 S)**	KIT AUTOCOLLANTS **(12522 S)**	SCHILD SATZ **(12522 S)**	DECAL KIT **(12522 S)**	KIT ETIQUETA **(12522 S)**
▲	289516		KIT TARGHETTA **(12523 S)**	KIT AUTOCOLLANTS **(12523 S)**	SCHILD SATZ **(12523 S)**	DECAL KIT **(12523 S)**	KIT ETIQUETA **(12523 S)**
□	289517		KIT TARGHETTA **(12524 S)**	KIT AUTOCOLLANTS **(12524 S)**	SCHILD SATZ **(12524 S)**	DECAL KIT **(12524 S)**	KIT ETIQUETA **(12524 S)**
/	289518		KIT TARGHETTA **(12525 S)**	KIT AUTOCOLLANTS **(12525 S)**	SCHILD SATZ **(12525 S)**	DECAL KIT **(12525 S)**	KIT ETIQUETA **(12525 S)**

Nota : ordinare solo i kit targhetta

Nota : ne commander que les kits plaque

Anmerkung : nur den Satz Schilder bestellen

Note : order only plate kits

Nota : ordenar sólo los kit tarjeta

TARGHETTE

* Autocollants
* Decals
* Schilder
* Etiquetas

TAV. GO.02.03

matr. G.A23.0001

PM 13,5 SP

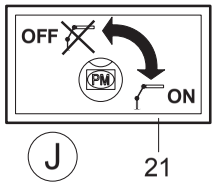

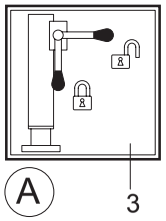

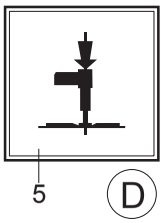

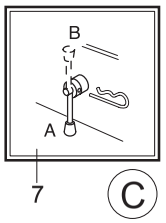

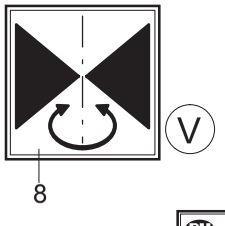

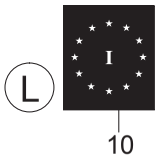

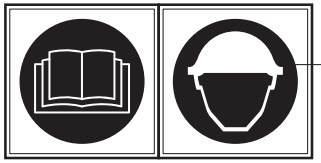

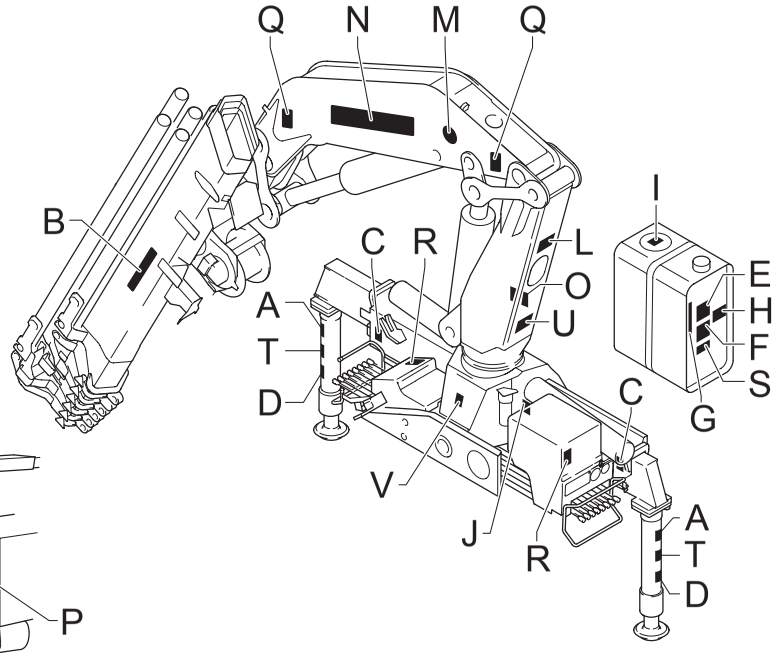

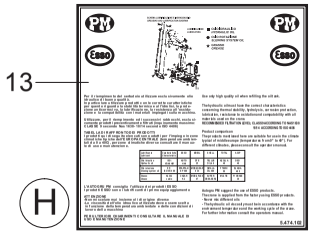

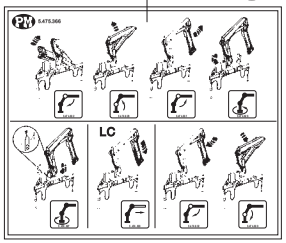

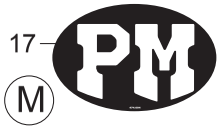

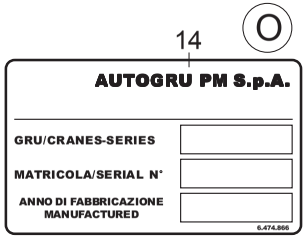

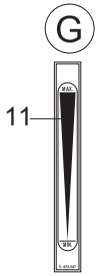

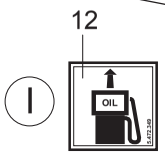

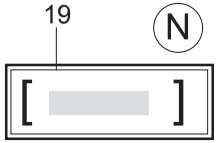

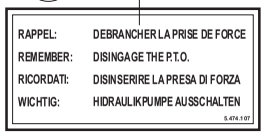

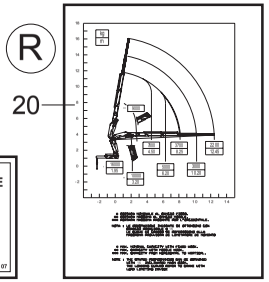

POS.		N°CODICE	Q	DESCRIZIONE	DESIGNATION	BENENNUNG	DESCRIPTION	DENOMINACIONES
1	X	478539	1	TARGHETTA	AUTOCOLLANTS	SCHILD	DECAL	ETIQUETA
2	X	478540	1	TARGHETTA	AUTOCOLLANTS	SCHILD	DECAL	ETIQUETA
3	■	478541	2	TARGHETTA	AUTOCOLLANTS	SCHILD	DECAL	ETIQUETA
4	■	478542	2	TARGHETTA	AUTOCOLLANTS	SCHILD	DECAL	ETIQUETA
5	■	478543	2	TARGHETTA	AUTOCOLLANTS	SCHILD	DECAL	ETIQUETA
6	■	478544	4	TARGHETTA	AUTOCOLLANTS	SCHILD	DECAL	ETIQUETA
7	■	478545	2	TARGHETTA	AUTOCOLLANTS	SCHILD	DECAL	ETIQUETA
8	X	478546	1	TARGHETTA	AUTOCOLLANTS	SCHILD	DECAL	ETIQUETA
9	X	478547	1	TARGHETTA	AUTOCOLLANTS	SCHILD	DECAL	ETIQUETA
10		472126	1	TARGHETTA	AUTOCOLLANTS	SCHILD	DECAL	ETIQUETA
11	○	472347	1	TARGHETTA	AUTOCOLLANTS	SCHILD	DECAL	ETIQUETA
12	○	472349	1	TARGHETTA	AUTOCOLLANTS	SCHILD	DECAL	ETIQUETA
13		474102	1	TARGHETTA	AUTOCOLLANTS	SCHILD	DECAL	ETIQUETA
14		474866	1	TARGHETTA	AUTOCOLLANTS	SCHILD	DECAL	ETIQUETA
15	■	474107	1	TARGHETTA	AUTOCOLLANTS	SCHILD	DECAL	ETIQUETA
16	○	475366	1	TARGHETTA	AUTOCOLLANTS	SCHILD	DECAL	ETIQUETA
17	○	472386	2	TARGHETTA	AUTOCOLLANTS	SCHILD	DECAL	ETIQUETA
18	○	478445	2	TARGHETTA	AUTOCOLLANTS	SCHILD	DECAL	ETIQUETA
19	/●✸▲□	478576	2	TARGHETTA	AUTOCOLLANTS	SCHILD	DECAL	ETIQUETA
22	●	478269	2	TARGHETTA (PM 13521 SP)	AUTOCOLLANTS	SCHILD	DECAL	ETIQUETA
22	✸	478270	2	TARGHETTA (PM 13522 SP)	AUTOCOLLANTS	SCHILD	DECAL	ETIQUETA
22	▲	478271	2	TARGHETTA (PM 13523 SP)	AUTOCOLLANTS	SCHILD	DECAL	ETIQUETA
22	□	478272	2	TARGHETTA (PM 13524 SP)	AUTOCOLLANTS	SCHILD	DECAL	ETIQUETA
22	/	478273	2	TARGHETTA (PM 13525 SP)	AUTOCOLLANTS	SCHILD	DECAL	ETIQUETA
21	■	478065	1	TARGHETTA	AUTOCOLLANTS	SCHILD	DECAL	ETIQUETA

TARGHETTE

* Autocollants
* Decals
* Schilder
* Etiquetas

TAV. GO.02.03

matr. G.A23.0001

PM 13,5 SP

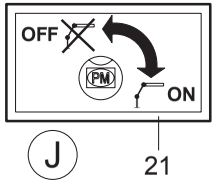

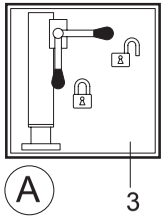

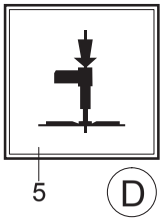

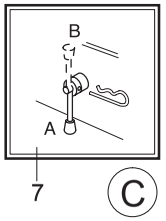

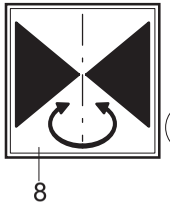

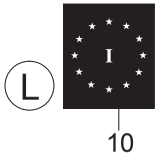

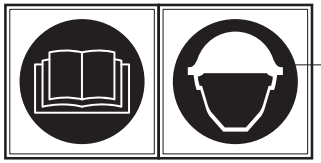

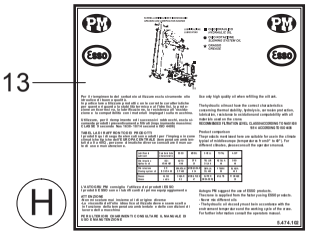

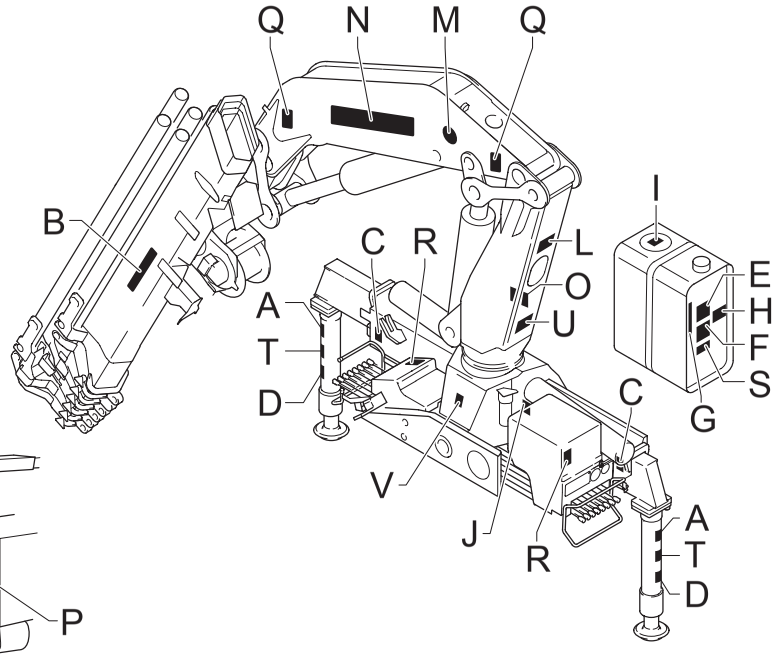

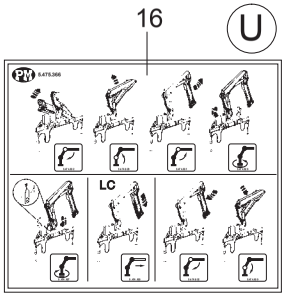

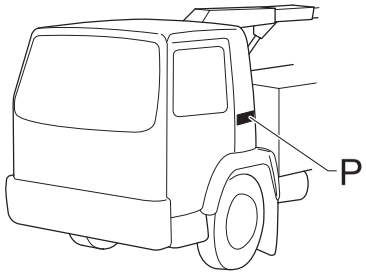

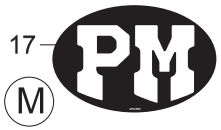

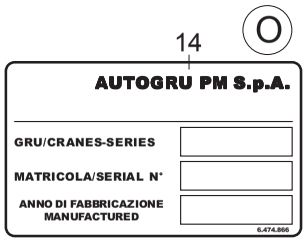

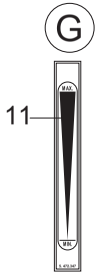

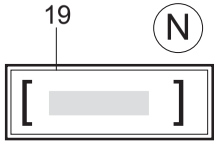

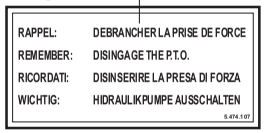

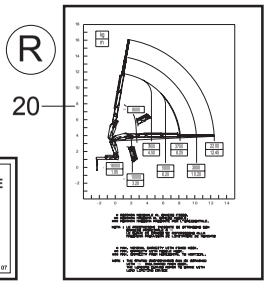

POS.	N°CODICE	Q	DESCRIZIONE	DESIGNATION	BENENNUNG	DESCRIPTION	DENOMINACIONES
■	289932		KIT TARGHETTA	KIT AUTOCOLLANTS	SCHILD SATZ	DECAL KIT	KIT ETIQUETA
○	289906		KIT TARGHETTA	KIT AUTOCOLLANTS	SCHILD SATZ	DECAL KIT	KIT ETIQUETA
X	289907		KIT TARGHETTA	KIT AUTOCOLLANTS	SCHILD SATZ	DECAL KIT	KIT ETIQUETA
●	289703		KIT TARGHETTA **(13521 SP)**	KIT AUTOCOLLANTS **(13521 SP)**	SCHILD SATZ **(13521 SP)**	DECAL KIT **(13521 SP)**	KIT ETIQUETA **(13521 SP)**
✸	289704		KIT TARGHETTA **(13522 SP)**	KIT AUTOCOLLANTS **(13522 SP)**	SCHILD SATZ **(13522 SP)**	DECAL KIT **(13522 SP)**	KIT ETIQUETA **(13522 SP)**
▲	289705		KIT TARGHETTA **(13523 SP)**	KIT AUTOCOLLANTS **(13523 SP)**	SCHILD SATZ **(13523 SP)**	DECAL KIT **(13523 SP)**	KIT ETIQUETA **(13523 SP)**
□	289707		KIT TARGHETTA **(13524 SP)**	KIT AUTOCOLLANTS **(13524 SP)**	SCHILD SATZ **(13524 SP)**	DECAL KIT **(13524 SP)**	KIT ETIQUETA **(13524 SP)**
/	289708		KIT TARGHETTA **(13525 SP)**	KIT AUTOCOLLANTS **(13525 SP)**	SCHILD SATZ **(13525 SP)**	DECAL KIT **(13525 SP)**	KIT ETIQUETA **(13525 SP)**

Nota : ordinare solo i kit targhetta

Nota : ne commander que les kits plaque

Anmerkung : nur den Satz Schilder bestellen

Note : order only plate kits

Nota : ordenar sólo los kit tarjeta

TARGHETTE

* Autocollants
* Decals
* Schilder
* Etiquetas

TAV. GO.04.01

matr. G.A23.0001

PM 12,5 LC

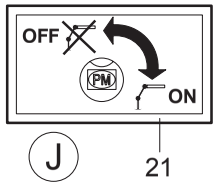

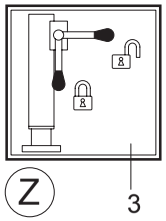

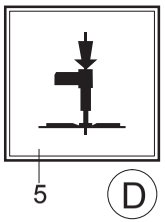

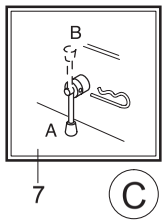

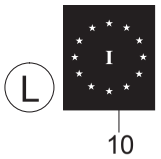

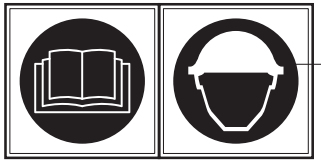

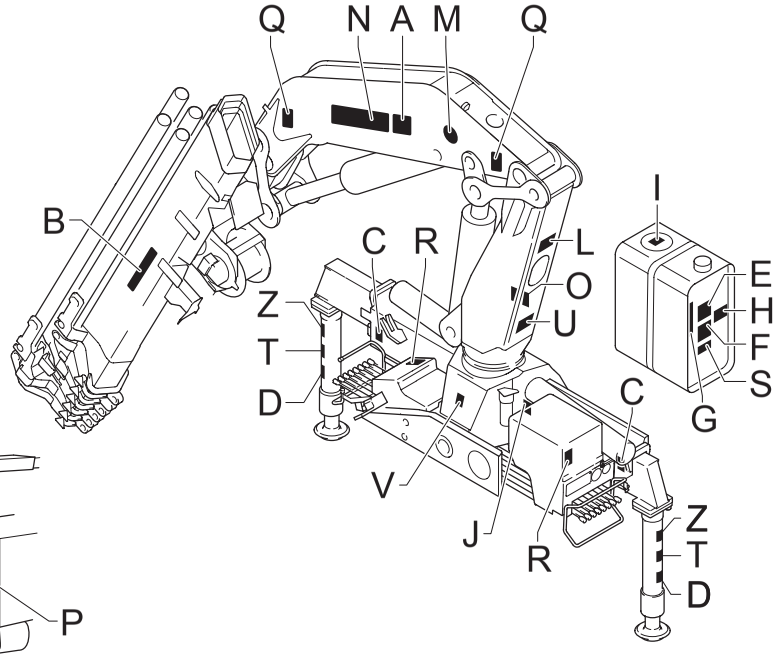

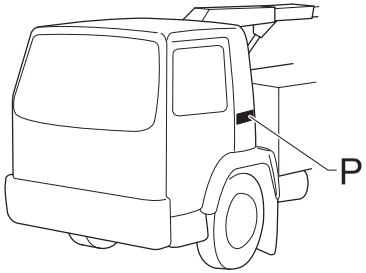

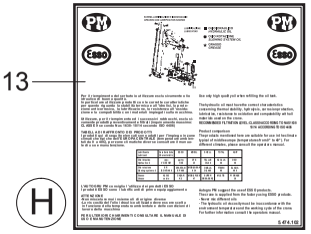

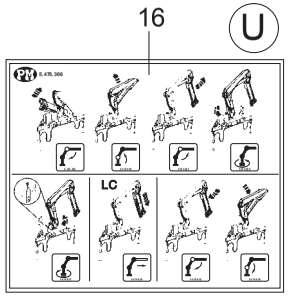

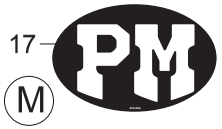

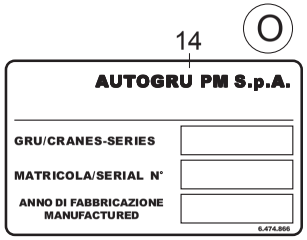

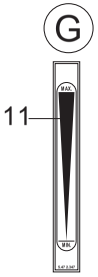

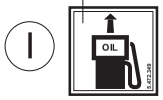

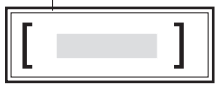

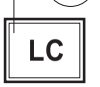

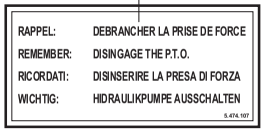

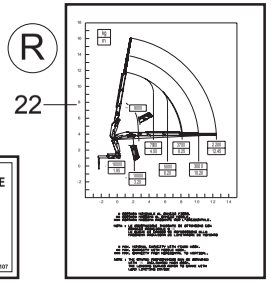

POS.		N°CODICE	Q	DESCRIZIONE	DESIGNATION	BENENNUNG	DESCRIPTION	DENOMINACIONES
1	X	478539	1	TARGHETTA	AUTOCOLLANTS	SCHILD	DECAL	ETIQUETA
2	X	478540	1	TARGHETTA	AUTOCOLLANTS	SCHILD	DECAL	ETIQUETA
3	■	478541	2	TARGHETTA	AUTOCOLLANTS	SCHILD	DECAL	ETIQUETA
4	■	478542	2	TARGHETTA	AUTOCOLLANTS	SCHILD	DECAL	ETIQUETA
5	■	478543	2	TARGHETTA	AUTOCOLLANTS	SCHILD	DECAL	ETIQUETA
6	■	478544	4	TARGHETTA	AUTOCOLLANTS	SCHILD	DECAL	ETIQUETA
7	■	478545	2	TARGHETTA	AUTOCOLLANTS	SCHILD	DECAL	ETIQUETA
8	X	478546	1	TARGHETTA	AUTOCOLLANTS	SCHILD	DECAL	ETIQUETA
9	X	478547	1	TARGHETTA	AUTOCOLLANTS	SCHILD	DECAL	ETIQUETA
10		472126	1	TARGHETTA	AUTOCOLLANTS	SCHILD	DECAL	ETIQUETA
11	○	472347	1	TARGHETTA	AUTOCOLLANTS	SCHILD	DECAL	ETIQUETA
12	○	472349	1	TARGHETTA	AUTOCOLLANTS	SCHILD	DECAL	ETIQUETA
13		474102	1	TARGHETTA	AUTOCOLLANTS	SCHILD	DECAL	ETIQUETA
14		474866	1	TARGHETTA	AUTOCOLLANTS	SCHILD	DECAL	ETIQUETA
15	■	474107	1	TARGHETTA	AUTOCOLLANTS	SCHILD	DECAL	ETIQUETA
16	○	475366	1	TARGHETTA	AUTOCOLLANTS	SCHILD	DECAL	ETIQUETA
17	○	472386	2	TARGHETTA	AUTOCOLLANTS	SCHILD	DECAL	ETIQUETA
18	○	478445	2	TARGHETTA	AUTOCOLLANTS	SCHILD	DECAL	ETIQUETA
19	/●✸▲□	478566	2	TARGHETTA	AUTOCOLLANTS	SCHILD	DECAL	ETIQUETA
20	/●✸▲□	171125	2	TARGHETTA	AUTOCOLLANTS	SCHILD	DECAL	ETIQUETA
21	■	478065	1	TARGHETTA	AUTOCOLLANTS	SCHILD	DECAL	ETIQUETA
22	●	478186	2	TARGHETTA (PM 12521 LC)	AUTOCOLLANTS	SCHILD	DECAL	ETIQUETA
22	✸	478187	2	TARGHETTA (PM 12522 LC)	AUTOCOLLANTS	SCHILD	DECAL	ETIQUETA
22	▲	478188	2	TARGHETTA (PM 12523 LC)	AUTOCOLLANTS	SCHILD	DECAL	ETIQUETA
22	□	478189	2	TARGHETTA (PM 12524 LC)	AUTOCOLLANTS	SCHILD	DECAL	ETIQUETA
22	/	478190	2	TARGHETTA (PM 12525 LC)	AUTOCOLLANTS	SCHILD	DECAL	ETIQUETA

TARGHETTE

* Autocollants
* Decals
* Schilder
* Etiquetas

TAV. GO.04.01

matr. G.A23.0001

PM 12,5 LC

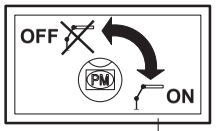

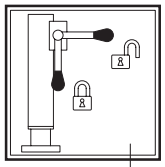

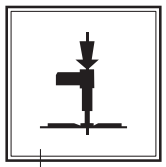

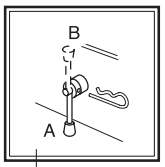

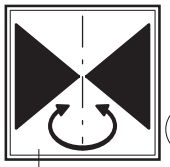

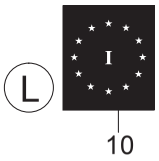

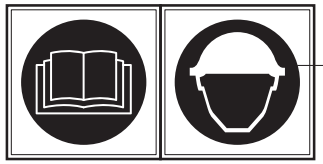

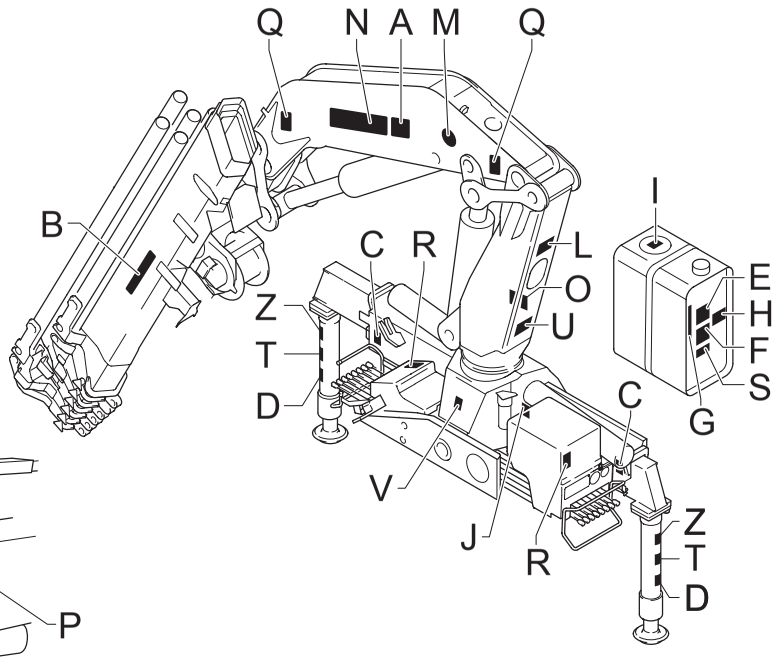

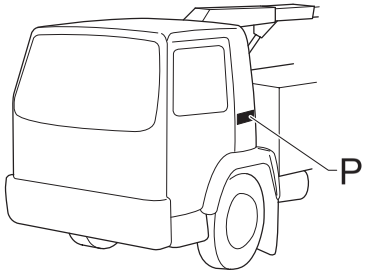

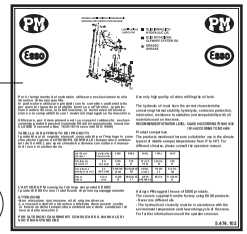

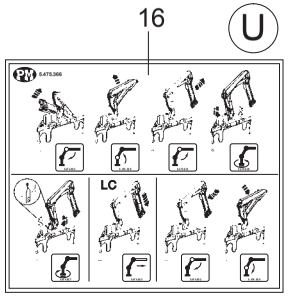

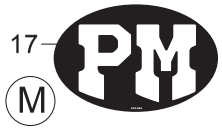

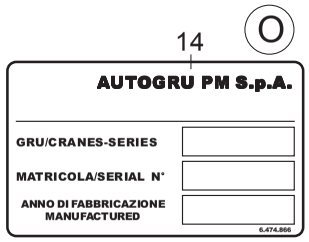

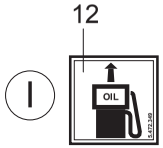

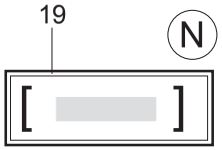

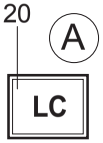

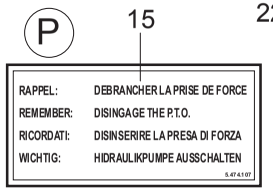

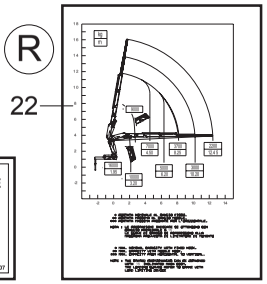

POS.	N°CODICE	Q	DESCRIZIONE	DESIGNATION	BENENNUNG	DESCRIPTION	DENOMINACIONES
■	289932		KIT TARGHETTA	KIT AUTOCOLLANTS	SCHILD SATZ	DECAL KIT	KIT ETIQUETA
○	289906		KIT TARGHETTA	KIT AUTOCOLLANTS	SCHILD SATZ	DECAL KIT	KIT ETIQUETA
X	289907		KIT TARGHETTA	KIT AUTOCOLLANTS	SCHILD SATZ	DECAL KIT	KIT ETIQUETA
●	289698		KIT TARGHETTA **(12521 LC)**	KIT AUTOCOLLANTS **(12521 LC)**	SCHILD SATZ **(12521 LC)**	DECAL KIT **(12521 LC)**	KIT ETIQUETA **(12521 LC)**
✷	289699		KIT TARGHETTA **(12522 LC)**	KIT AUTOCOLLANTS **(12522 LC)**	SCHILD SATZ **(12522 LC)**	DECAL KIT **(12522 LC)**	KIT ETIQUETA **(12522 LC)**
▲	289700		KIT TARGHETTA **(12523 LC)**	KIT AUTOCOLLANTS **(12523 LC)**	SCHILD SATZ **(12523 LC)**	DECAL KIT **(12523 LC)**	KIT ETIQUETA **(12523 LC)**
□	289701		KIT TARGHETTA **(12524 LC)**	KIT AUTOCOLLANTS **(12524 LC)**	SCHILD SATZ **(12524 LC)**	DECAL KIT **(12524 LC)**	KIT ETIQUETA **(12524 LC)**
/	289702		KIT TARGHETTA **(12525 LC)**	KIT AUTOCOLLANTS **(12525 LC)**	SCHILD SATZ **(12525 LC)**	DECAL KIT **(12525 LC)**	KIT ETIQUETA **(12525 LC)**

Nota : ordinare solo i kit targhetta

Nota : ne commander que les kits plaque

Anmerkung : nur den Satz Schilder bestellen

Note : order only plate kits

Nota : ordenar sólo los kit tarjeta

TARGHETTE

** Autocollants*
** Decals*
** Schilder*
** Etiquetas*

TAV. GO.04.02

matr. G.A23.0001

PM 12,5 S LC

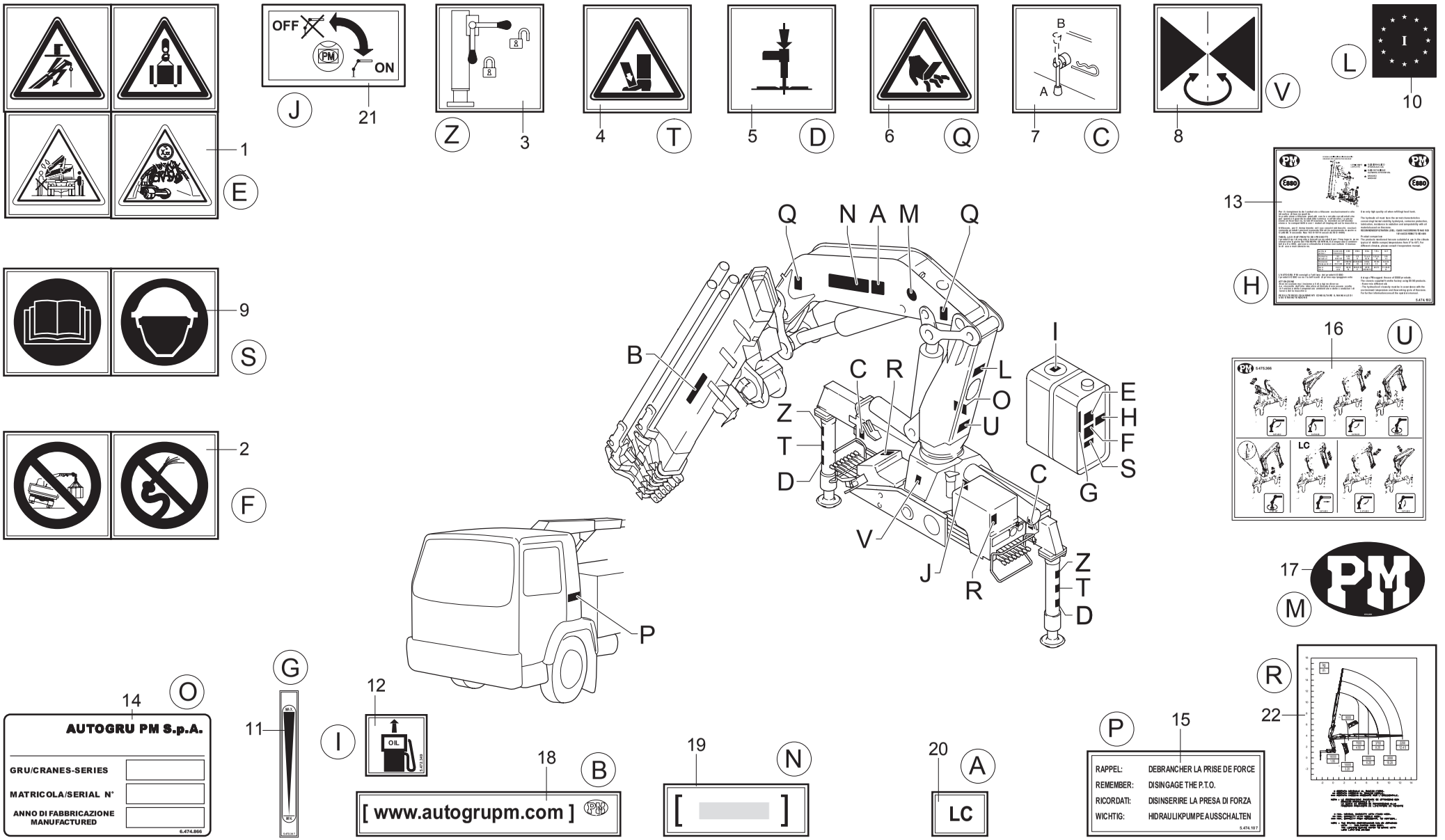

UNISTUDIO - Moden

POS.	N°CODICE	Q	DESCRIZIONE	DESIGNATION	BENENNUNG	DESCRIPTION	DENOMINACIONES
1 X	478539	1	TARGHETTA	AUTOCOLLANTS	SCHILD	DECAL	ETIQUETA
2 X	478540	1	TARGHETTA	AUTOCOLLANTS	SCHILD	DECAL	ETIQUETA
3 ■	478541	2	TARGHETTA	AUTOCOLLANTS	SCHILD	DECAL	ETIQUETA
4 ■	478542	2	TARGHETTA	AUTOCOLLANTS	SCHILD	DECAL	ETIQUETA
5 ■	478543	2	TARGHETTA	AUTOCOLLANTS	SCHILD	DECAL	ETIQUETA
6 ■	478544	4	TARGHETTA	AUTOCOLLANTS	SCHILD	DECAL	ETIQUETA
7 ■	478545	2	TARGHETTA	AUTOCOLLANTS	SCHILD	DECAL	ETIQUETA
8 X	478546	1	TARGHETTA	AUTOCOLLANTS	SCHILD	DECAL	ETIQUETA
9 X	478547	1	TARGHETTA	AUTOCOLLANTS	SCHILD	DECAL	ETIQUETA
10	472126	1	TARGHETTA	AUTOCOLLANTS	SCHILD	DECAL	ETIQUETA
11 ○	472347	1	TARGHETTA	AUTOCOLLANTS	SCHILD	DECAL	ETIQUETA
12 ○	472349	1	TARGHETTA	AUTOCOLLANTS	SCHILD	DECAL	ETIQUETA
13	474102	1	TARGHETTA	AUTOCOLLANTS	SCHILD	DECAL	ETIQUETA
14	474866	1	TARGHETTA	AUTOCOLLANTS	SCHILD	DECAL	ETIQUETA
15 ■	474107	1	TARGHETTA	AUTOCOLLANTS	SCHILD	DECAL	ETIQUETA
16 ○	475366	1	TARGHETTA	AUTOCOLLANTS	SCHILD	DECAL	ETIQUETA
17 ○	472386	2	TARGHETTA	AUTOCOLLANTS	SCHILD	DECAL	ETIQUETA
18 ○	478445	2	TARGHETTA	AUTOCOLLANTS	SCHILD	DECAL	ETIQUETA
19 /●✸▲□	478574	2	TARGHETTA	AUTOCOLLANTS	SCHILD	DECAL	ETIQUETA
20 /●✸▲□	171125	2	TARGHETTA	AUTOCOLLANTS	SCHILD	DECAL	ETIQUETA
21 ■	478065	1	TARGHETTA	AUTOCOLLANTS	SCHILD	DECAL	ETIQUETA
22 ●	478001	2	TARGHETTA (PM 12521 S LC)	AUTOCOLLANTS	SCHILD	DECAL	ETIQUETA
22 ✸	478002	2	TARGHETTA (PM 12522 S LC)	AUTOCOLLANTS	SCHILD	DECAL	ETIQUETA
22 ▲	478003	2	TARGHETTA (PM 12523 S LC)	AUTOCOLLANTS	SCHILD	DECAL	ETIQUETA
22 □	478004	2	TARGHETTA (PM 12524 S LC)	AUTOCOLLANTS	SCHILD	DECAL	ETIQUETA
22 /	478005	2	TARGHETTA (PM 12525 S LC)	AUTOCOLLANTS	SCHILD	DECAL	ETIQUETA

TARGHETTE

* Autocollants
* Decals
* Schilder
* Etiquetas

TAV. GO.04.02

matr. G.A23.0001

PM 12,5 S LC

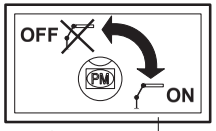

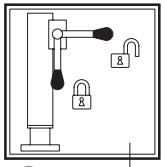

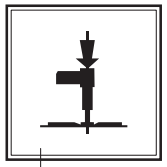

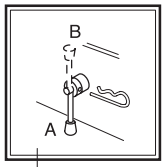

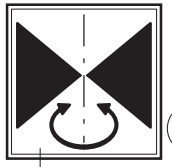

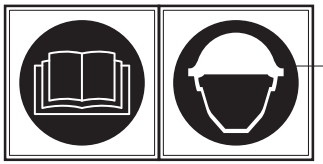

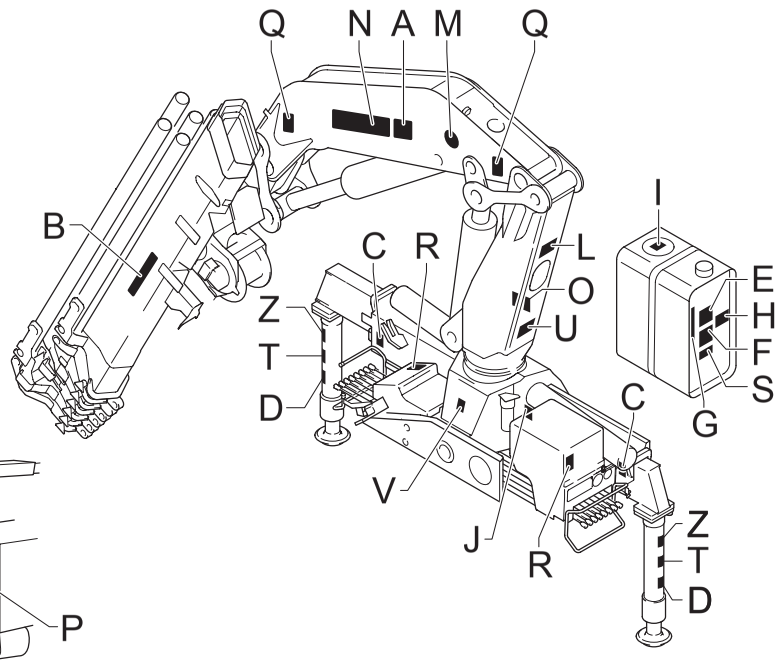

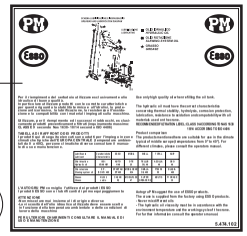

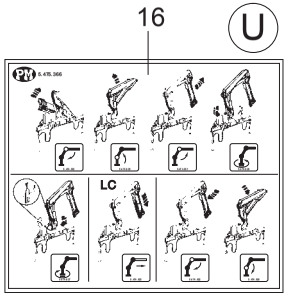

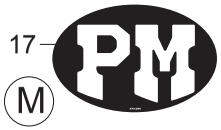

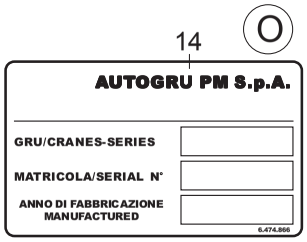

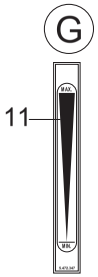

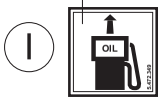

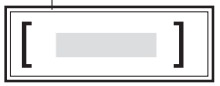

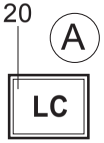

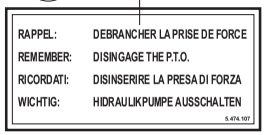

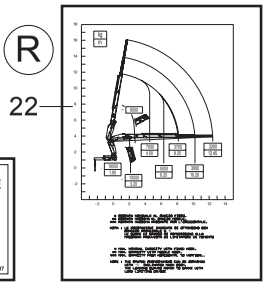

POS.	N°CODICE	Q	DESCRIZIONE	DESIGNATION	BENENNUNG	DESCRIPTION	DENOMINACIONES
■	289932		KIT TARGHETTA	KIT AUTOCOLLANTS	SCHILD SATZ	DECAL KIT	KIT ETIQUETA
○	289906		KIT TARGHETTA	KIT AUTOCOLLANTS	SCHILD SATZ	DECAL KIT	KIT ETIQUETA
X	289907		KIT TARGHETTA	KIT AUTOCOLLANTS	SCHILD SATZ	DECAL KIT	KIT ETIQUETA
●	289519		KIT TARGHETTA **(12521 S LC)**	KIT AUTOCOLLANTS **(12521 S LC)**	SCHILD SATZ **(12521 S LC)**	DECAL KIT **(12521 S LC)**	KIT ETIQUETA **(12521 S LC)**
✷	289520		KIT TARGHETTA **(12522 S LC)**	KIT AUTOCOLLANTS **(12522 S LC)**	SCHILD SATZ **(12522 S LC)**	DECAL KIT **(12522 S LC)**	KIT ETIQUETA **(12522 S LC)**
▲	289521		KIT TARGHETTA **(12523 S LC)**	KIT AUTOCOLLANTS **(12523 S LC)**	SCHILD SATZ **(12523 S LC)**	DECAL KIT **(12523 S LC)**	KIT ETIQUETA **(12523 S LC)**
□	289522		KIT TARGHETTA **(12524 S LC)**	KIT AUTOCOLLANTS **(12524 S LC)**	SCHILD SATZ **(12524 S LC)**	DECAL KIT **(12524 S LC)**	KIT ETIQUETA **(12524 S LC)**
/	289523		KIT TARGHETTA **(12525 S LC)**	KIT AUTOCOLLANTS **(12525 S LC)**	SCHILD SATZ **(12525 S LC)**	DECAL KIT **(12525 S LC)**	KIT ETIQUETA **(12525 S LC)**

Nota : ordinare solo i kit targhetta

Nota : ne commander que les kits plaque

Anmerkung : nur den Satz Schilder bestellen

Note : order only plate kits

Nota : ordenar sólo los kit tarjeta

TARGHETTE

* Autocollants
* Decals
* Schilder
* Etiquetas

TAV. GO.04.03

matr. G.A23.0001

PM 13,5 SP LC

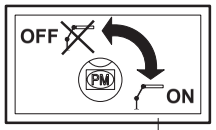

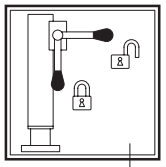

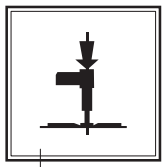

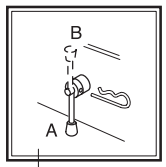

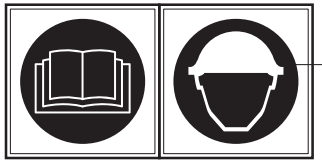

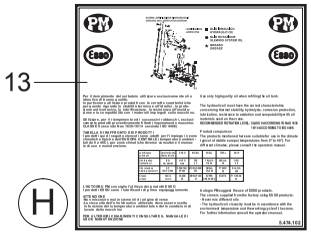

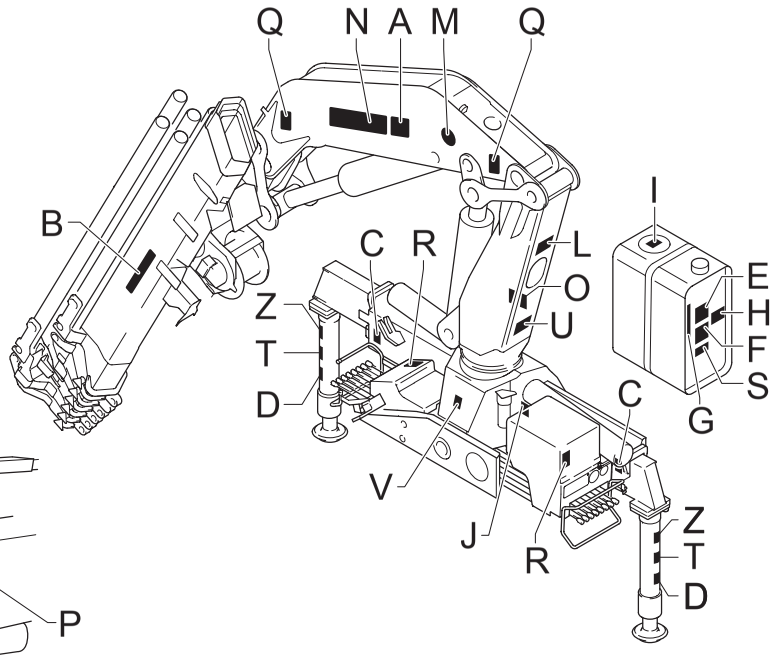

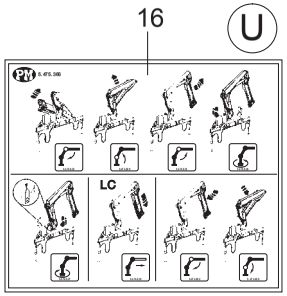

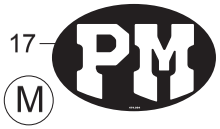

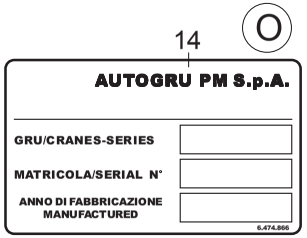

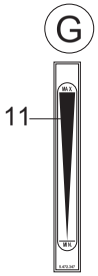

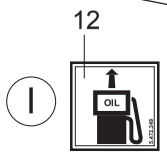

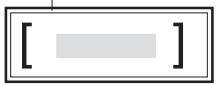

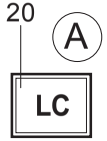

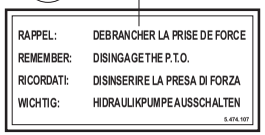

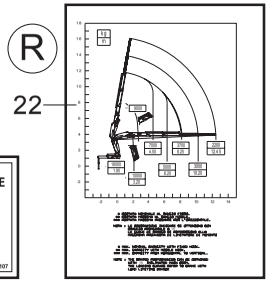

POS.		N°CODICE	Q	DESCRIZIONE	DESIGNATION	BENENNUNG	DESCRIPTION	DENOMINACIONES
1	X	478539	1	TARGHETTA	AUTOCOLLANTS	SCHILD	DECAL	ETIQUETA
2	X	478540	1	TARGHETTA	AUTOCOLLANTS	SCHILD	DECAL	ETIQUETA
3	■	478541	2	TARGHETTA	AUTOCOLLANTS	SCHILD	DECAL	ETIQUETA
4	■	478542	2	TARGHETTA	AUTOCOLLANTS	SCHILD	DECAL	ETIQUETA
5	■	478543	2	TARGHETTA	AUTOCOLLANTS	SCHILD	DECAL	ETIQUETA
6	■	478544	4	TARGHETTA	AUTOCOLLANTS	SCHILD	DECAL	ETIQUETA
7	■	478545	2	TARGHETTA	AUTOCOLLANTS	SCHILD	DECAL	ETIQUETA
8	X	478546	1	TARGHETTA	AUTOCOLLANTS	SCHILD	DECAL	ETIQUETA
9	X	478547	1	TARGHETTA	AUTOCOLLANTS	SCHILD	DECAL	ETIQUETA
10		472126	1	TARGHETTA	AUTOCOLLANTS	SCHILD	DECAL	ETIQUETA
11	○	472347	1	TARGHETTA	AUTOCOLLANTS	SCHILD	DECAL	ETIQUETA
12	○	472349	1	TARGHETTA	AUTOCOLLANTS	SCHILD	DECAL	ETIQUETA
13		474102	1	TARGHETTA	AUTOCOLLANTS	SCHILD	DECAL	ETIQUETA
14		474866	1	TARGHETTA	AUTOCOLLANTS	SCHILD	DECAL	ETIQUETA
15	■	474107	1	TARGHETTA	AUTOCOLLANTS	SCHILD	DECAL	ETIQUETA
16	○	475366	1	TARGHETTA	AUTOCOLLANTS	SCHILD	DECAL	ETIQUETA
17	○	472386	2	TARGHETTA	AUTOCOLLANTS	SCHILD	DECAL	ETIQUETA
18	○	478445	2	TARGHETTA	AUTOCOLLANTS	SCHILD	DECAL	ETIQUETA
19	/●✸▲□	478576	2	TARGHETTA	AUTOCOLLANTS	SCHILD	DECAL	ETIQUETA
20	/●✸▲□	171125	2	TARGHETTA	AUTOCOLLANTS	SCHILD	DECAL	ETIQUETA
21	■	478065	1	TARGHETTA	AUTOCOLLANTS	SCHILD	DECAL	ETIQUETA
22	●	478269	2	TARGHETTA (PM 13521 SP LC)	AUTOCOLLANTS	SCHILD	DECAL	ETIQUETA
22	✸	478270	2	TARGHETTA (PM 13522 SP LC)	AUTOCOLLANTS	SCHILD	DECAL	ETIQUETA
22	▲	478271	2	TARGHETTA (PM 13523 SP LC)	AUTOCOLLANTS	SCHILD	DECAL	ETIQUETA
22	□	478272	2	TARGHETTA (PM 13524 SP LC)	AUTOCOLLANTS	SCHILD	DECAL	ETIQUETA
22	/	478273	2	TARGHETTA (PM 13525 SP LC)	AUTOCOLLANTS	SCHILD	DECAL	ETIQUETA

TARGHETTE

* Autocollants
* Decals
* Schilder
* Etiquetas

TAV. GO.04.03

matr. G.A23.0001

PM 13,5 SP LC

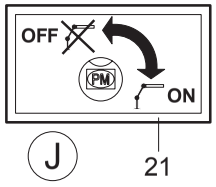

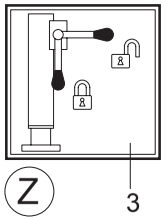

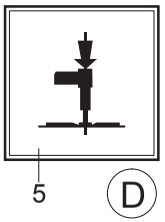

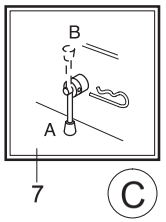

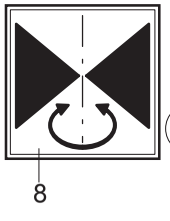

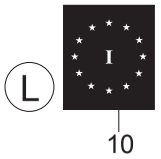

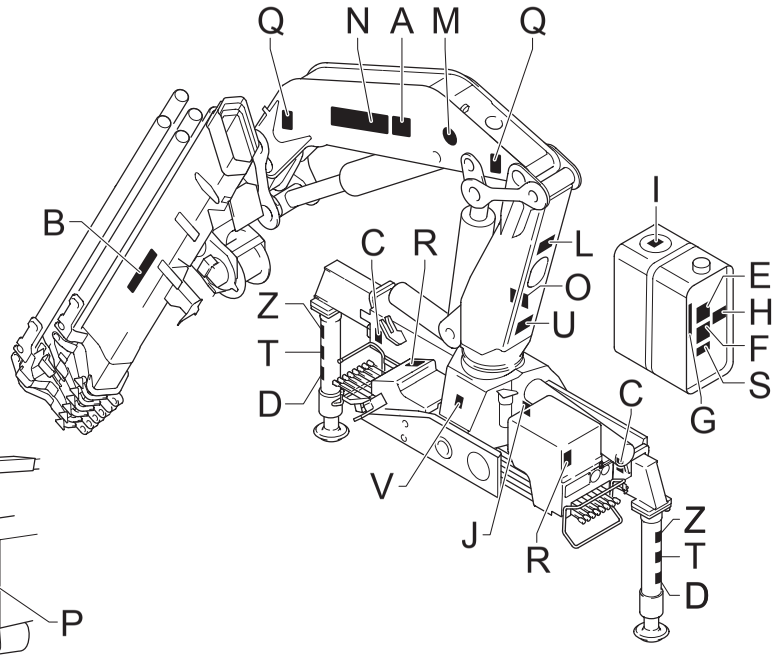

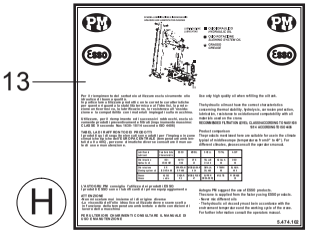

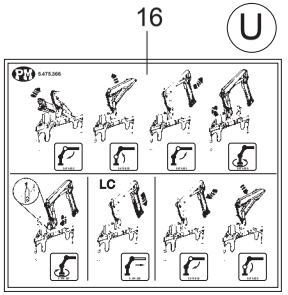

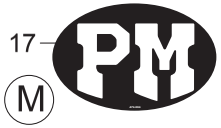

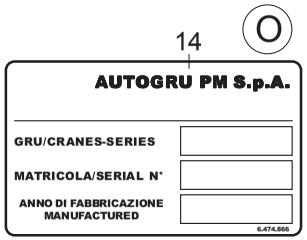

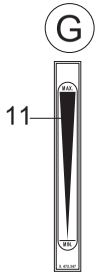

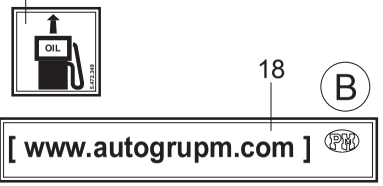

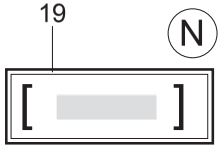

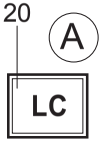

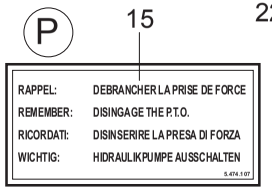

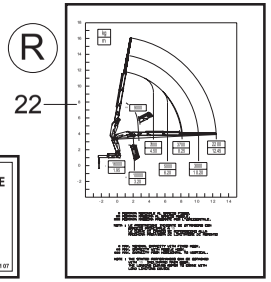

POS.	N°CODICE	Q	DESCRIZIONE	DESIGNATION	BENENNUNG	DESCRIPTION	DENOMINACIONES
■	289932		KIT TARGHETTA	KIT AUTOCOLLANTS	SCHILD SATZ	DECAL KIT	KIT ETIQUETA
○	289906		KIT TARGHETTA	KIT AUTOCOLLANTS	SCHILD SATZ	DECAL KIT	KIT ETIQUETA
X	289907		KIT TARGHETTA	KIT AUTOCOLLANTS	SCHILD SATZ	DECAL KIT	KIT ETIQUETA
●	289709		KIT TARGHETTA **(13521 SP LC)**	KIT AUTOCOLLANTS **(13521 SP LC)**	SCHILD SATZ **(13521 SP LC)**	DECAL KIT **(13521 SP LC)**	KIT ETIQUETA **(13521 SP LC)**
✸	289710		KIT TARGHETTA **(13522 SP LC)**	KIT AUTOCOLLANTS **(13522 SP LC)**	SCHILD SATZ **(13522 SP LC)**	DECAL KIT **(13522 SP LC)**	KIT ETIQUETA **(13522 SP LC)**
▲	289711		KIT TARGHETTA **(13523 SP LC)**	KIT AUTOCOLLANTS **(13523 SP LC)**	SCHILD SATZ **(13523 SP LC)**	DECAL KIT **(13523 SP LC)**	KIT ETIQUETA **(13523 SP LC)**
□	289712		KIT TARGHETTA **(13524 SP LC)**	KIT AUTOCOLLANTS **(13524 SP LC)**	SCHILD SATZ **(13524 SP LC)**	DECAL KIT **(13524 SP LC)**	KIT ETIQUETA **(13524 SP LC)**
/	289713		KIT TARGHETTA **(13525 SP LC)**	KIT AUTOCOLLANTS **(13525 SP LC)**	SCHILD SATZ **(13525 SP LC)**	DECAL KIT **(13525 SP LC)**	KIT ETIQUETA **(13525 SP LC)**

Nota : ordinare solo i kit targhetta

Nota : ne commander que les kits plaque

Anmerkung : nur den Satz Schilder bestellen

Note : order only plate kits

Nota : ordenar sólo los kit tarjeta

TARGHETTE 3° PUNTO DI MANOVRA

** Plaquettes 3ème point de manœuvre*
** Nameplates for the 3rd manoeuvre position*
** Schilder 3. Manöverplatz*
** Placas 3er punto de maniobra*

TAV. GO.05.01

matr. G.A23.0001

PM 12,5
PM 12,5 S

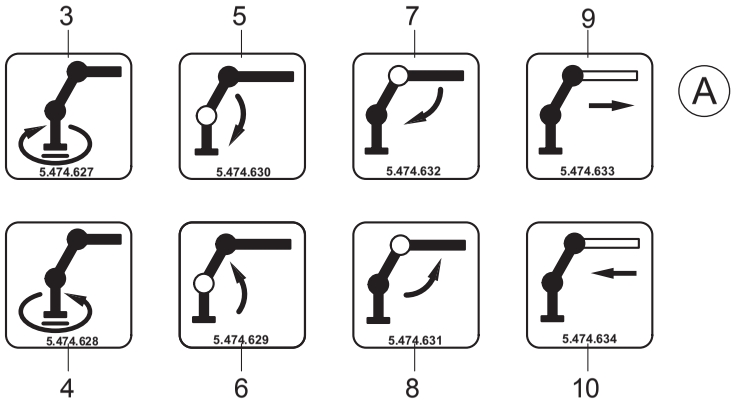

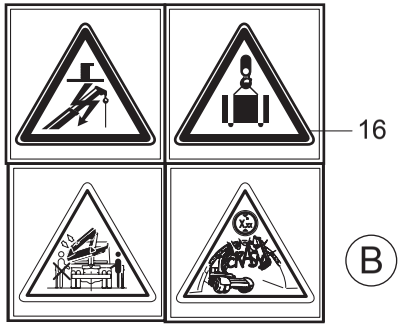

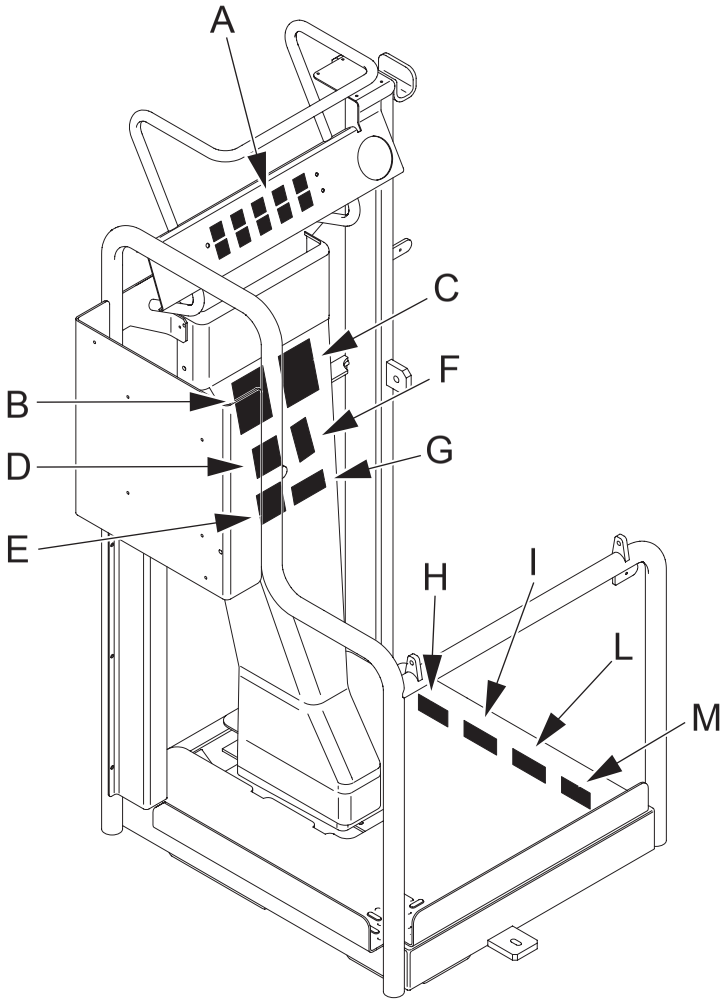

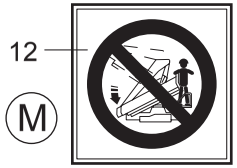

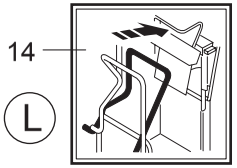

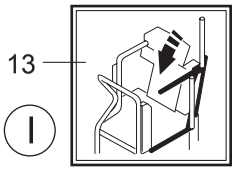

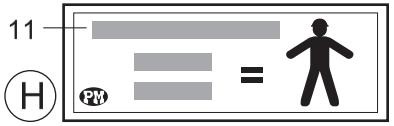

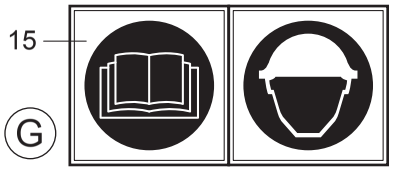

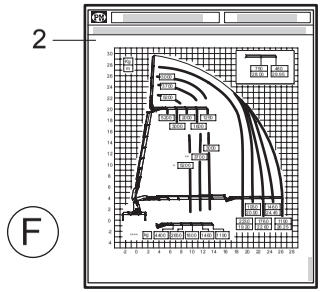

UNISTUDIO - Moden

POS.	N°CODICE	Q	DESCRIZIONE	DESIGNATION	BENENNUNG	DESCRIPTION	DENOMINACIONES
1	478540	1	TARGHETTA	AUTOCOLLANTS	SCHILD	DECAL	ETIQUETA
2	478001	1	TARGHETTA	AUTOCOLLANTS	SCHILD	DECAL	ETIQUETA
2	478002	1	TARGHETTA	AUTOCOLLANTS	SCHILD	DECAL	ETIQUETA
2	478003	1	TARGHETTA	AUTOCOLLANTS	SCHILD	DECAL	ETIQUETA
2	478004	1	TARGHETTA	AUTOCOLLANTS	SCHILD	DECAL	ETIQUETA
2	478005	1	TARGHETTA	AUTOCOLLANTS	SCHILD	DECAL	ETIQUETA
3	474627	1	TARGHETTA	AUTOCOLLANTS	SCHILD	DECAL	ETIQUETA
4	474628	1	TARGHETTA	AUTOCOLLANTS	SCHILD	DECAL	ETIQUETA
5	474630	1	TARGHETTA	AUTOCOLLANTS	SCHILD	DECAL	ETIQUETA
6	474629	1	TARGHETTA	AUTOCOLLANTS	SCHILD	DECAL	ETIQUETA
7	474632	1	TARGHETTA	AUTOCOLLANTS	SCHILD	DECAL	ETIQUETA
8	474631	1	TARGHETTA	AUTOCOLLANTS	SCHILD	DECAL	ETIQUETA
9	474633	1	TARGHETTA	AUTOCOLLANTS	SCHILD	DECAL	ETIQUETA
10	474634	1	TARGHETTA	AUTOCOLLANTS	SCHILD	DECAL	ETIQUETA
11	475177	1	TARGHETTA	AUTOCOLLANTS	SCHILD	DECAL	ETIQUETA
12	475105	1	TARGHETTA	AUTOCOLLANTS	SCHILD	DECAL	ETIQUETA
13	478161	1	TARGHETTA	AUTOCOLLANTS	SCHILD	DECAL	ETIQUETA
14	478162	1	TARGHETTA	AUTOCOLLANTS	SCHILD	DECAL	ETIQUETA
15	478547	1	TARGHETTA	AUTOCOLLANTS	SCHILD	DECAL	ETIQUETA
16	478539	1	TARGHETTA	AUTOCOLLANTS	SCHILD	DECAL	ETIQUETA
17	475110	1	TARGHETTA	AUTOCOLLANTS	SCHILD	DECAL	ETIQUETA
18	478550	1	TARGHETTA	AUTOCOLLANTS	SCHILD	DECAL	ETIQUETA

SUPPLEMENTI - ACCESSORI

OPTIONALS - ACCESSORIES

OPTIONS - ACCESSOIRES

ZUSATZ - AUSTATTUNG

OPCIONES - ACCESORIOS

1° PROLUNGA MECCANICA

* 1ère rallonge mécanique
* First mechanical extension
* 1. mechanische Verlängerung
* Primera prolonga mecánica

TAV. ST.01.01

matr. G.A23.0001

PM 12522
PM 12522 S
PM 13522 SP

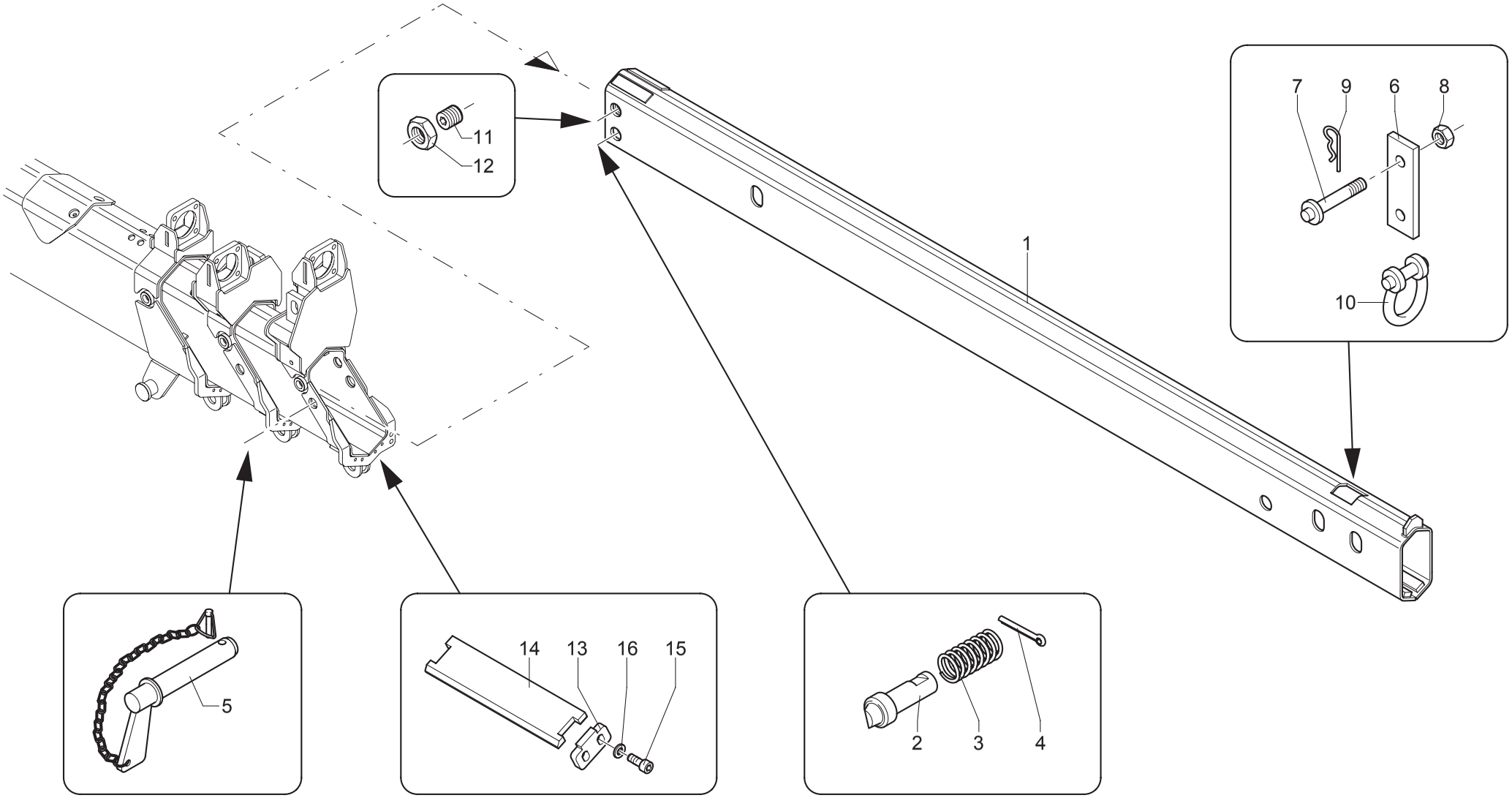

POS.	N°CODICE	Q	DESCRIZIONE	DESIGNATION	BENENNUNG	DESCRIPTION	DENOMINACIONES
1	141735	1	BRACCIO	BRAS	ARM	BOOM	BRAZO
2	379163	1	PERNO	AXE	BOLZEN	PIN	BULON
3	349110	1	MOLLA	RESSORT	FEDER	SPRING	MUELLE
4	455200	1	SPINA 4X30 UNI 6874	GOUPILLE	SPLINT	SPLIT PIN	PASADOR
5	379202	1	PERNO	AXE	BOLZEN	PIN	BULON
6	123402	1	ATTACCO	ATTACHE	VERBINDUNG	COUPLING	CONEXION
7	379728	1	PERNO	AXE	BOLZEN	PIN	BULON
8	191085	1	DADO M24X2 UNI 5589	ECROU	MUTTER	NUT	TUERCA
9	177013	1	COPIGLIA 3,2X40 UNI 1336	GOUPILLE	SPLINT	SPLIT PIN	PASADOR
10	235025	1	GRILLO	MANILLE LYRE	ANKERSCHAKEL	SHACKLE	ANILLO
11	497158	2	VITE STEI M22X1,5X30 UNI5923 12.9	VIS	SCHRAUBE	SCREW	TORNILLO
12	191084	2	DADO M22X1,5 UNI 5589	ECROU	MUTTER	NUT	TUERCA
13	208204	2	FERMO	ARRET	SPERRUNG	RETAINER	TOPE
14	373170	2	PATTINO	PATIN	GLEIPLATTE	SLIDING BLOCK	PATIN
15	497238	4	VITE TCEI RIB.M8X20 DIN 7984 8.8	VIS	SCHRAUBE	SCREW	TORNILLO
16	417025	4	RONDELLA SCHNORR S8 ZN	RONDELLE	SCHEIBE	WASHER	ARANDELA

1° PROLUNGA MECCANICA-PM 12523 - 13523 - 2° PROLUNGA MECCANICA-PM 12522 - 13522

** 1ère rallonge méc. - 2ème rallonge mécanique*
** First mech. extension - second mech. extension*
** 1. mechanische Verlängerung - 2. mechanische Verlängerung*
** Primera prolonga mecánica - segunda prolonga mecánica*

TAV. ST.02.01

matr. G.A23.0001

PM 12522-23
PM 12522-23 S
PM 13522-23 SP

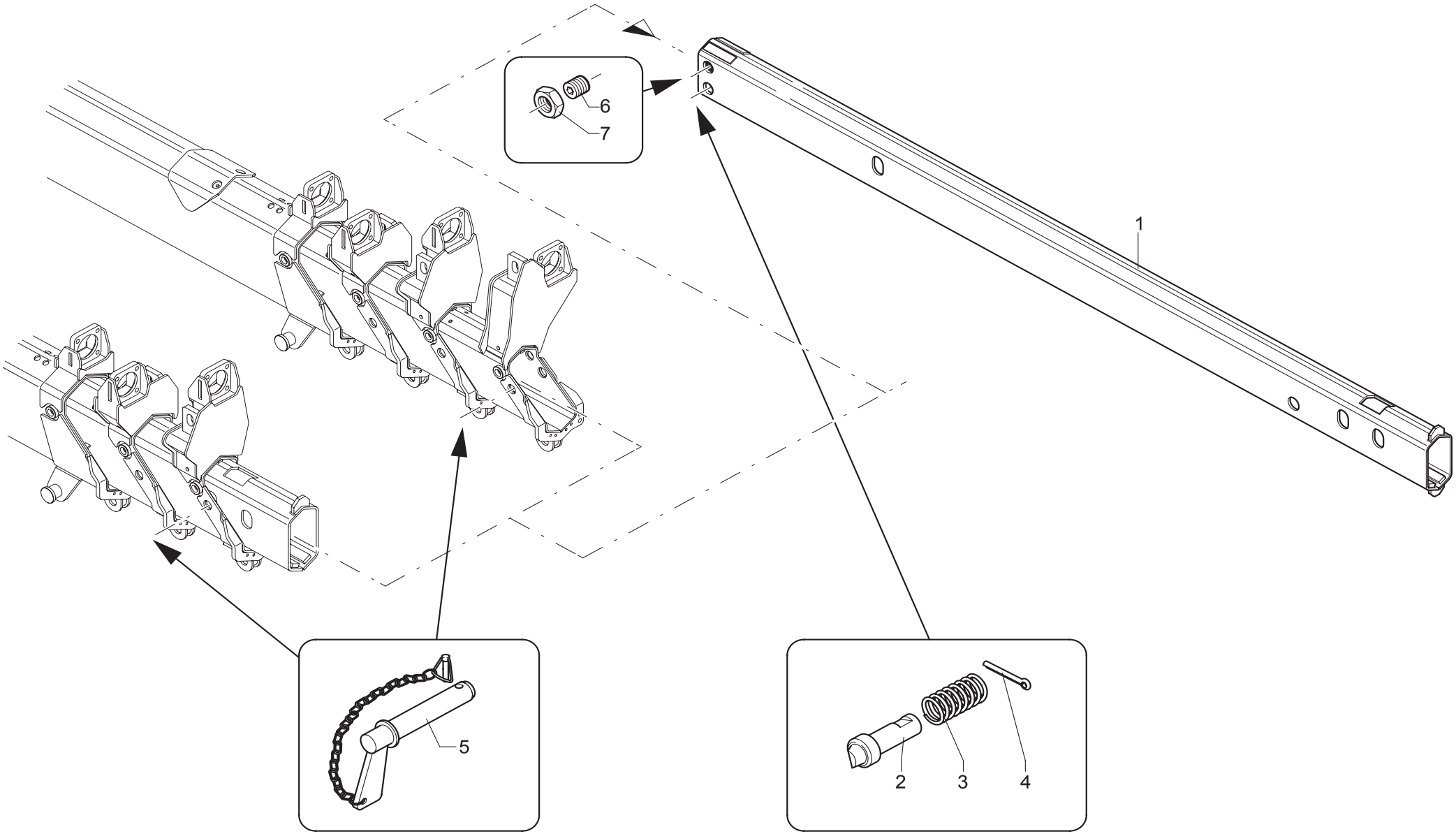

UNISTUDIO - Moder

POS.	N°CODICE	Q	DESCRIZIONE	DESIGNATION	BENENNUNG	DESCRIPTION	DENOMINACIONES
1	141736	1	BRACCIO	BRAS	ARM	BOOM	BRAZO
2	379163	1	PERNO	AXE	BOLZEN	PIN	BULON
3	349110	1	MOLLA	RESSORT	FEDER	SPRING	MUELLE
4	455200	1	SPINA 4X30 UNI 6874	GOUPILLE	SPLINT	SPLIT PIN	PASADOR
5	379203	1	PERNO	AXE	BOLZEN	PIN	BULON
6	497158	2	VITE STEI M22X1,5X30 UNI5923 12.9	VIS	SCHRAUBE	SCREW	TORNILLO
7	191084	2	DADO M22X1,5 UNI 5589	ECROU	MUTTER	NUT	TUERCA

2° PROLUNGA MECCANICA

** 2ème rallonge mécanique*
** Second mechanical extension*
** 2. mechanische Verlängerung*
** Segunda prolonga mecánica*

TAV. ST.03.01

matr. G.A23.0001

PM 12523
PM 12523 S
PM 13523 SP

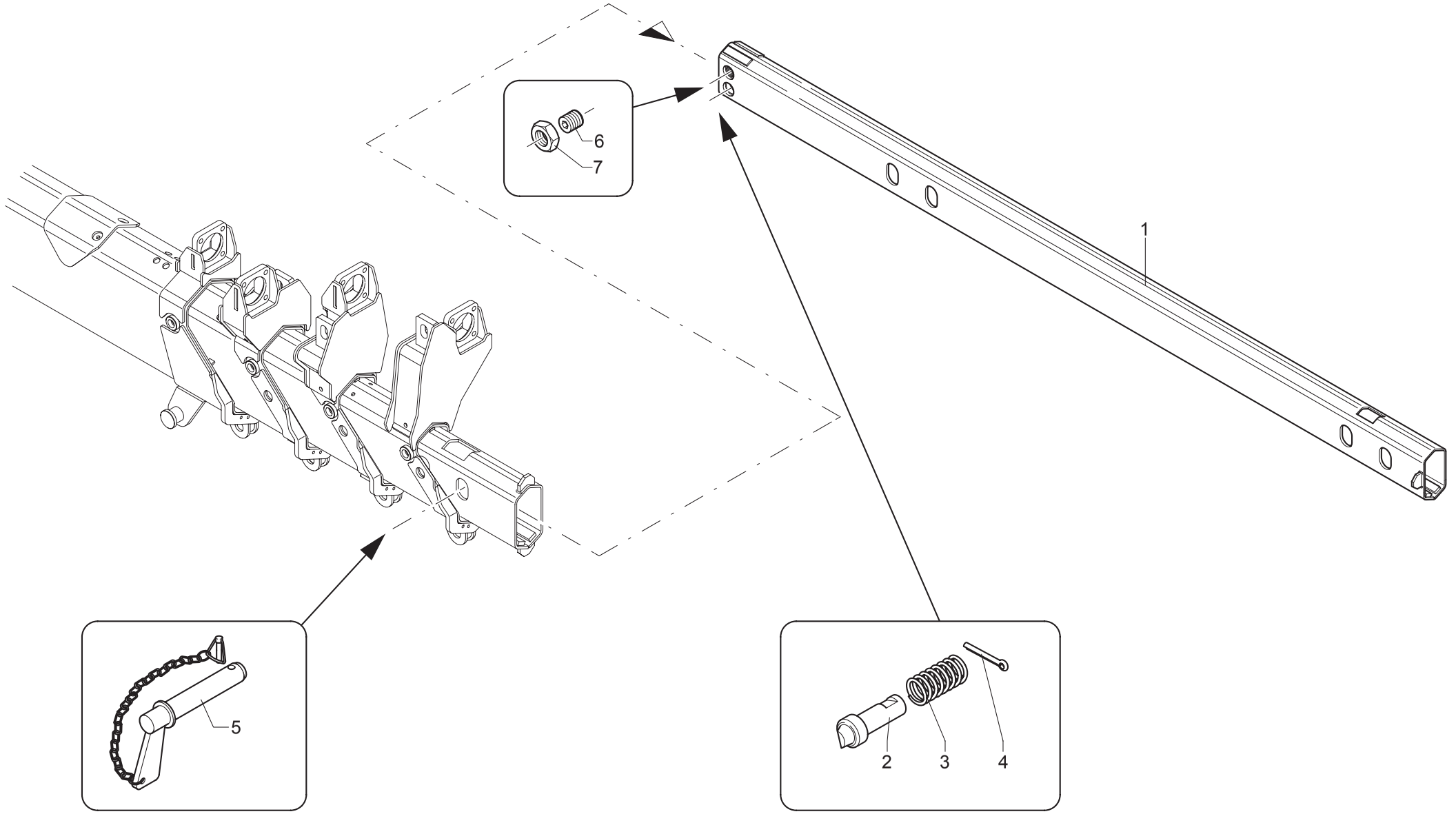

UNISTUDIO - Moder

POS.	N°CODICE	Q	DESCRIZIONE	DESIGNATION	BENENNUNG	DESCRIPTION	DENOMINACIONES
1	141737	1	BRACCIO	BRAS	ARM	BOOM	BRAZO
2	379163	1	PERNO	AXE	BOLZEN	PIN	BULON
3	349110	1	MOLLA	RESSORT	FEDER	SPRING	MUELLE
4	455200	1	SPINA 4X30 UNI 6874	GOUPILLE	SPLINT	SPLIT PIN	PASADOR
5	379204	1	PERNO	AXE	BOLZEN	PIN	BULON
6	497158	2	VITE STEI M22X1,5X30 UNI5923 12.9	VIS	SCHRAUBE	SCREW	TORNILLO
7	191084	2	DADO M22X1,5 UNI 5589	ECROU	MUTTER	NUT	TUERCA

3° PROLUNGA MECCANICA

** 3ème rallonge mécanique*
** Third mechanical extension*
** 3. mechanische Verlängerung*
** Tercera prolonga mecánica*

TAV. ST.04.01

matr. G.A23.0001

PM 12523
PM 12523 S
PM 13523 SP

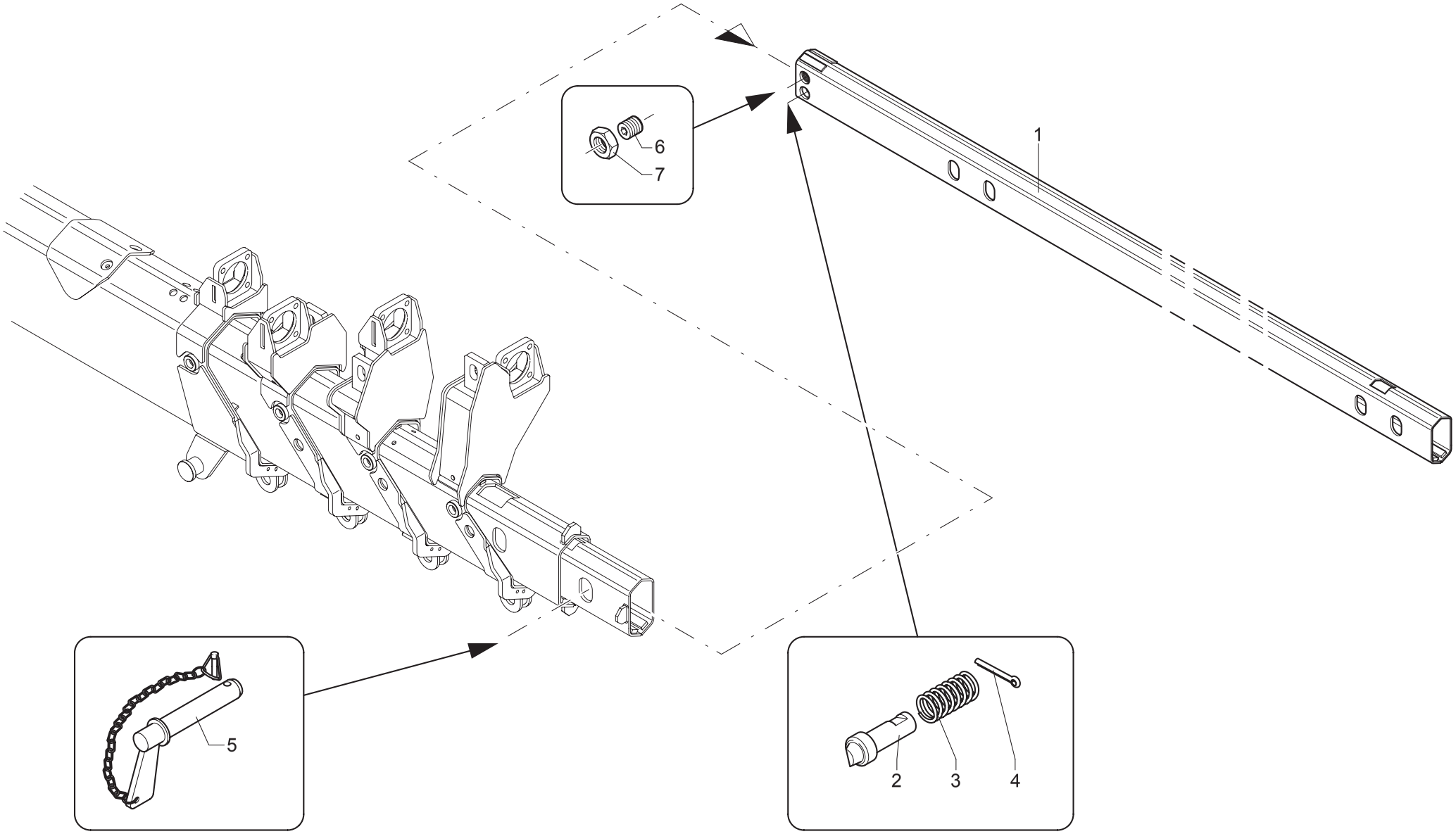

UNISTUDIO - Moder

POS.	N°CODICE	Q	DESCRIZIONE	DESIGNATION	BENENNUNG	DESCRIPTION	DENOMINACIONES
1	141775	1	BRACCIO	BRAS	ARM	BOOM	BRAZO
2	379163	1	PERNO	AXE	BOLZEN	PIN	BULON
3	349110	1	MOLLA	RESSORT	FEDER	SPRING	MUELLE
4	455200	1	SPINA 4X30 UNI 6874	GOUPILLE	SPLINT	SPLIT PIN	PASADOR
5	379204	1	PERNO	AXE	BOLZEN	PIN	BULON
6	497226	2	VITE STEI M22X1,5X25 UNI5923 12.9	VIS	SCHRAUBE	SCREW	TORNILLO
7	191084	2	DADO M22X1,5 UNI 5589	ECROU	MUTTER	NUT	TUERCA

1° PROLUNGA MECCANICA

** 1ère rallonge mécanique*
** First mechanical extension*
** 1. mechanische Verlängerung*
** Primera prolonga mecánica*

TAV. ST.05.01

matr. G.A23.0001

PM 12524
PM 12524 S
PM 13524 SP

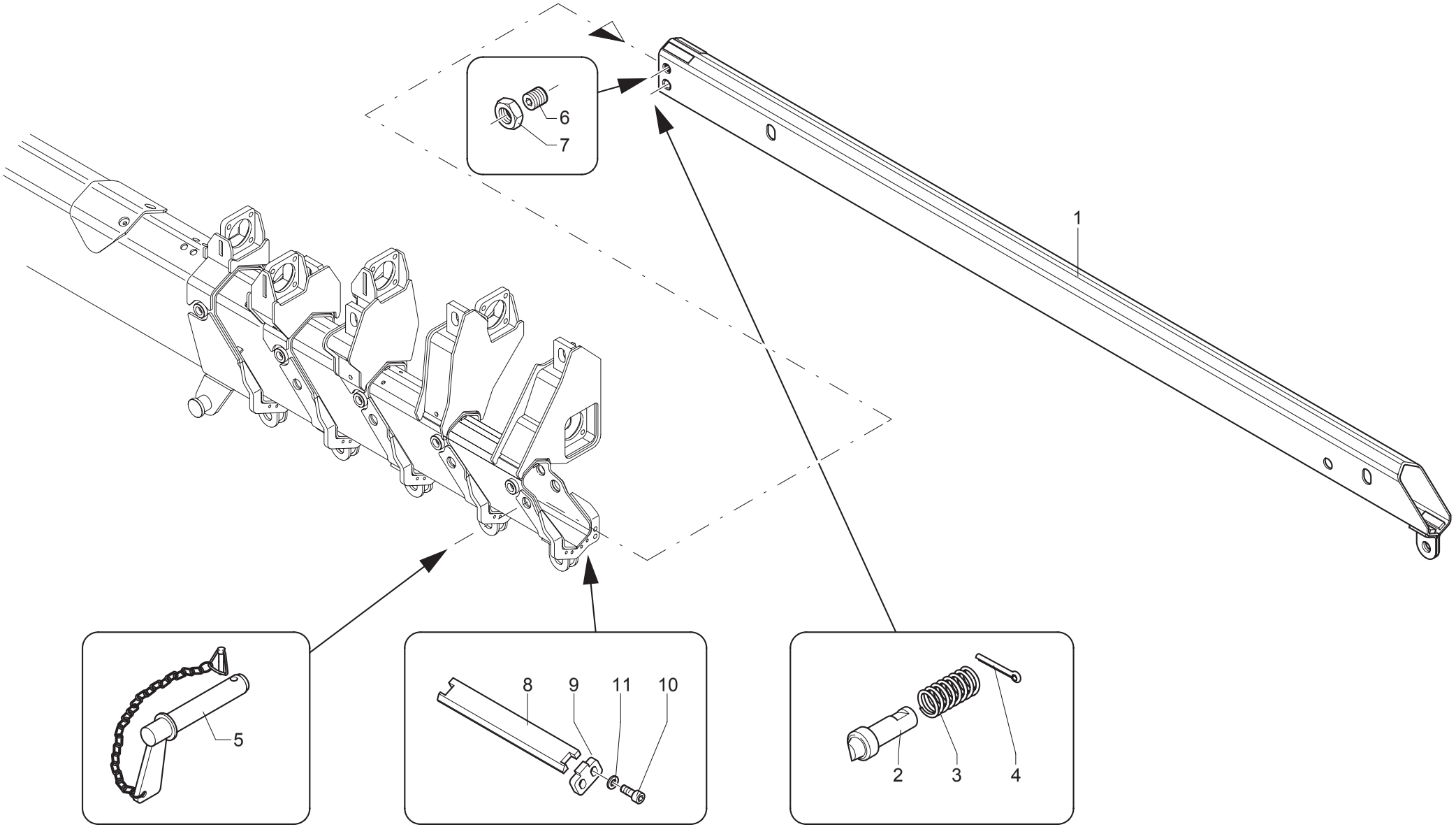

UNISTUDIO - Moder

POS.	N°CODICE	Q	DESCRIZIONE	DESIGNATION	BENENNUNG	DESCRIPTION	DENOMINACIONES
1	142214	1	BRACCIO	BRAS	ARM	BOOM	BRAZO
2	379163	1	PERNO	AXE	BOLZEN	PIN	BULON
3	349110	1	MOLLA	RESSORT	FEDER	SPRING	MUELLE
4	455200	1	SPINA 4X30 UNI 6874	GOUPILLE	SPLINT	SPLIT PIN	PASADOR
5	380223	1	PERNO	AXE	BOLZEN	PIN	BULON
6	497158	2	VITE STEI M22X1,5X30 UNI5923 12.9	VIS	SCHRAUBE	SCREW	TORNILLO
7	191084	2	DADO M22X1,5 UNI 5589	ECROU	MUTTER	NUT	TUERCA
8	373172	2	PATTINO	PATIN	GLEIPLATTE	SLIDING BLOCK	PATIN
9	208205	2	FERMO	ARRET	SPERRUNG	RETAINER	TOPE
10	497238	4	VITE TCEI RIB.M8X20 DIN 7984 8.8	VIS	SCHRAUBE	SCREW	TORNILLO
11	417025	4	RONDELLA SCHNORR S8 ZN	RONDELLE	SCHEIBE	WASHER	ARANDELA

1° PROLUNGA MECCANICA-PM 12525 -13525 - 2° PROLUNGA MECCANICA-PM 12524 -13524

** 1ère rallonge mécan. - 2ème rallonge mécan. * 1. mechanische Verlängerung - 2. mechanische Verlängerung*
** First mechan. extension - second mechan. extension * Primera prolonga mecánica - segunda prolonga mecánica*

TAV. ST.06.01

matr. G.A23.0001

PM 12524-25
PM 12524-25 S
PM 13524-25 SP

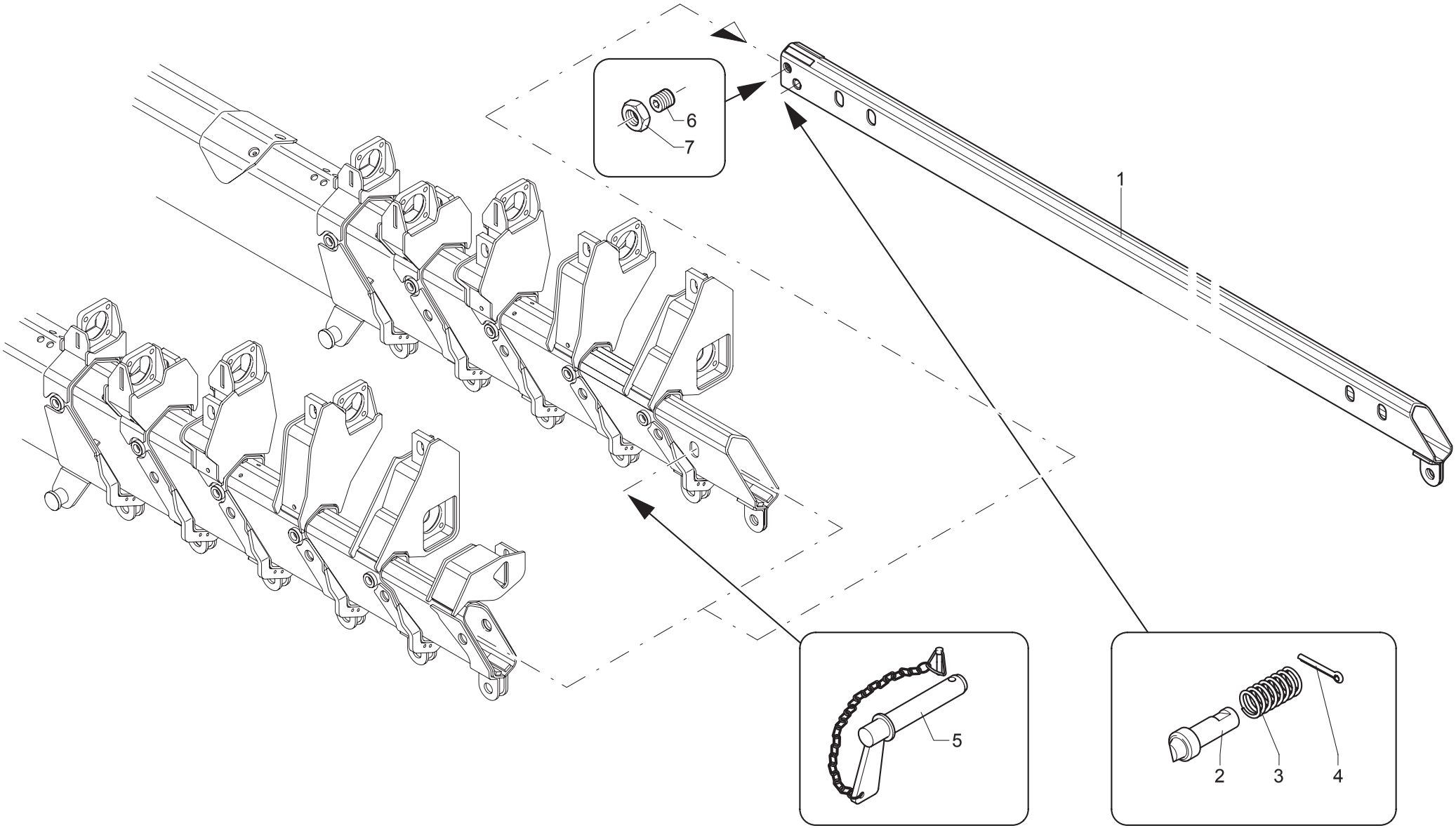

UNISTUDIO - Moder

POS.	N°CODICE	Q	DESCRIZIONE	DESIGNATION	BENENNUNG	DESCRIPTION	DENOMINACIONES
1	142215	1	BRACCIO	BRAS	ARM	BOOM	BRAZO
2	379163	1	PERNO	AXE	BOLZEN	PIN	BULON
3	349110	1	MOLLA	RESSORT	FEDER	SPRING	MUELLE
4	455200	1	SPINA 4X30 UNI 6874	GOUPILLE	SPLINT	SPLIT PIN	PASADOR
5	379204	1	PERNO	AXE	BOLZEN	PIN	BULON
6	497226	2	VITE STEI M22X1,5X25 UNI5923 12.9	VIS	SCHRAUBE	SCREW	TORNILLO
7	191084	2	DADO M22X1,5 UNI 5589	ECROU	MUTTER	NUT	TUERCA

LIMITATORE DI MOMENTO

* Limiteur de moment
* Moment control device
* Momentbegrenzer
* Sistema limitador de momento

TAV. SU.01.01 1/2

matr. G.A23.0001

PM 12,5
PM 12,5 S
PM 13,5 SP

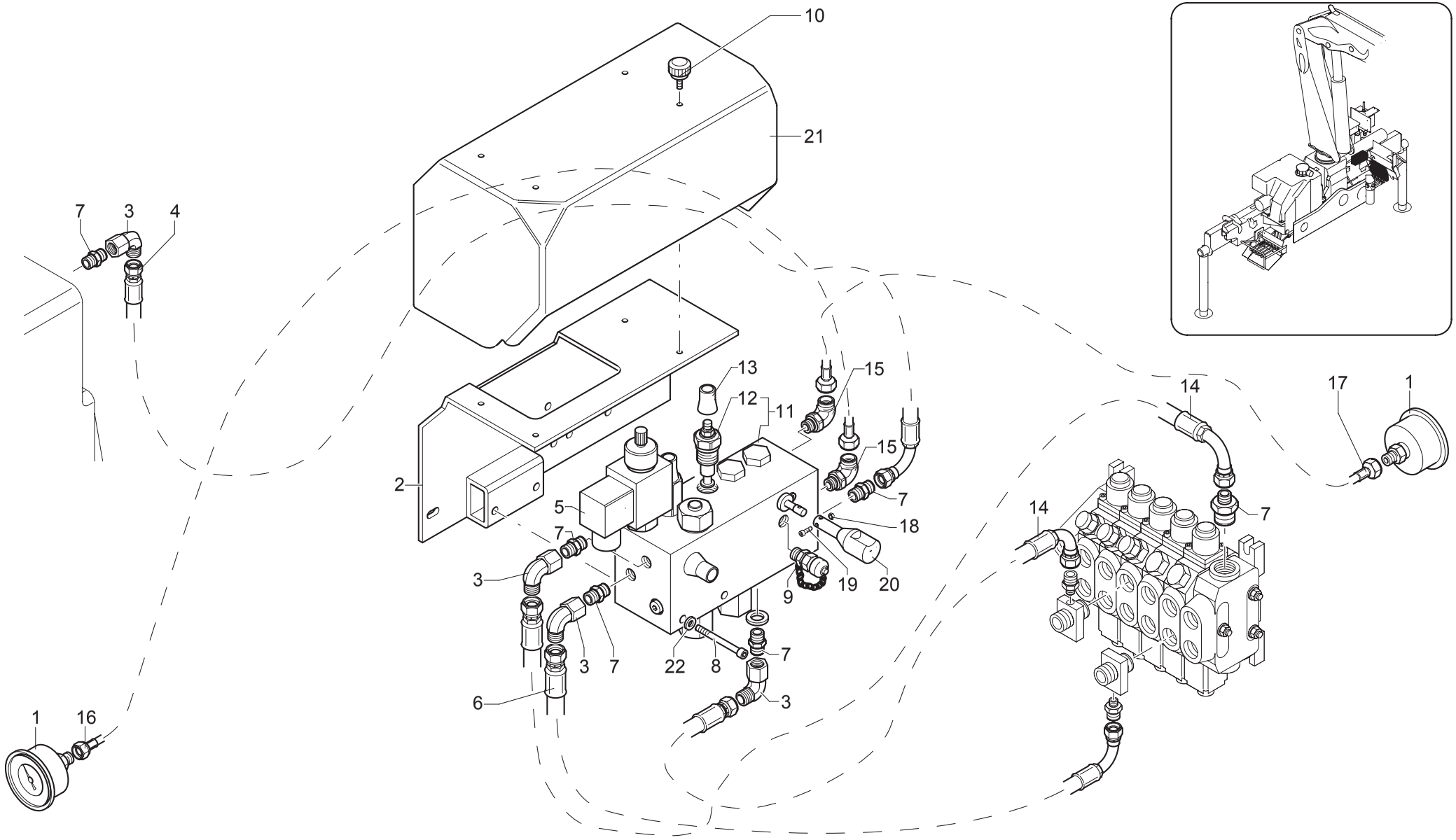

UNISTUDIO - Moder

POS.	N°CODICE	Q	DESCRIZIONE	DESIGNATION	BENENNUNG	DESCRIPTION	DENOMINACIONES
1	335008	2	MANOMETRO	MANOMETRE	DRUCKMESSER	GAUGE	MANOMETRO
2	466542	1	SUPPORTO	SUPPORT	TRAEGER	SUPPORT	SOPORTE
3	409436	4	RACCORDO	RACCORD	FITTING	FITTING	RACOR
4	486873	1	TUBO IN GOMMA	TUYAU FLEX.	SCHLAUCH	HOSE	LATIGUILLO
5	204072	1	ELETTROVALVOLA	ELECTROVANNE	ELEKTROVENTIL	ELECTROVALVE	ELECTRO-VALVULA
6	485094	1	TUBO IN GOMMA	TUYAU FLEX.	SCHLAUCH	HOSE	LATIGUILLO
7	409426	6	RACCORDO	RACCORD	FITTING	FITTING	RACOR
8	498084	2	VITE TCEI M8X90 UNI 5931 8.8	VIS	SCHRAUBE	SCREW	TORNILLO
9	124009	1	INNESTO	CONNECTION	SCHALTKUPPLUNG	COUPLING	CONEXION
10	385034	4	POMELLO	POMMEAU	KNOPF	KNOB	POMO
11	495532	1	VALVOLA	SOUPAPE	VENTIL	VALVE	VALVULA
12	495163	1	VALVOLA	SOUPAPE	VENTIL	VALVE	VALVULA
13	471277	1	TAPPO	BOUCHON	VERSCHLUSS	CAP	TAPON
14	486901	2	TUBO IN GOMMA	TUYAU FLEX.	SCHLAUCH	HOSE	LATIGUILLO
15	410143	2	RACCORDO	RACCORD	FITTING	FITTING	RACOR
16	486629	1	TUBO IN GOMMA	TUYAU FLEX.	SCHLAUCH	HOSE	LATIGUILLO
17	485970	1	TUBO IN GOMMA	TUYAU FLEX.	SCHLAUCH	HOSE	LATIGUILLO
18	191178	1	DADO M3 UNI 7473	ECROU	MUTTER	NUT	TUERCA
19	497405	1	VITE	VIS	SCHRAUBE	SCREW	TORNILLO
20	120749	1	LEVA	LEVIER	HEBEL	LEVER	PALANCA
21	176235	1	PROTEZIONE	PROTECTION	SCHUTZ	PROTECTION	PROTECCION
22	417025	2	RONDELLA SCHNORR S8 ZN	RONDELLE	SCHEIBE	WASHER	ARANDELA

COMPLETAMENTO LIMITATORE DI MOMENTO

** Compl. limiteur de moment*
** Compl. moment control device*
** Ergänzung Momentbegrenzer*
** Complet. sistema limitador de momento*

TAV. SU.01.01 2/2

matr. G.A23.0001

PM 12,5
PM 12,5 S
PM 13,5 SP

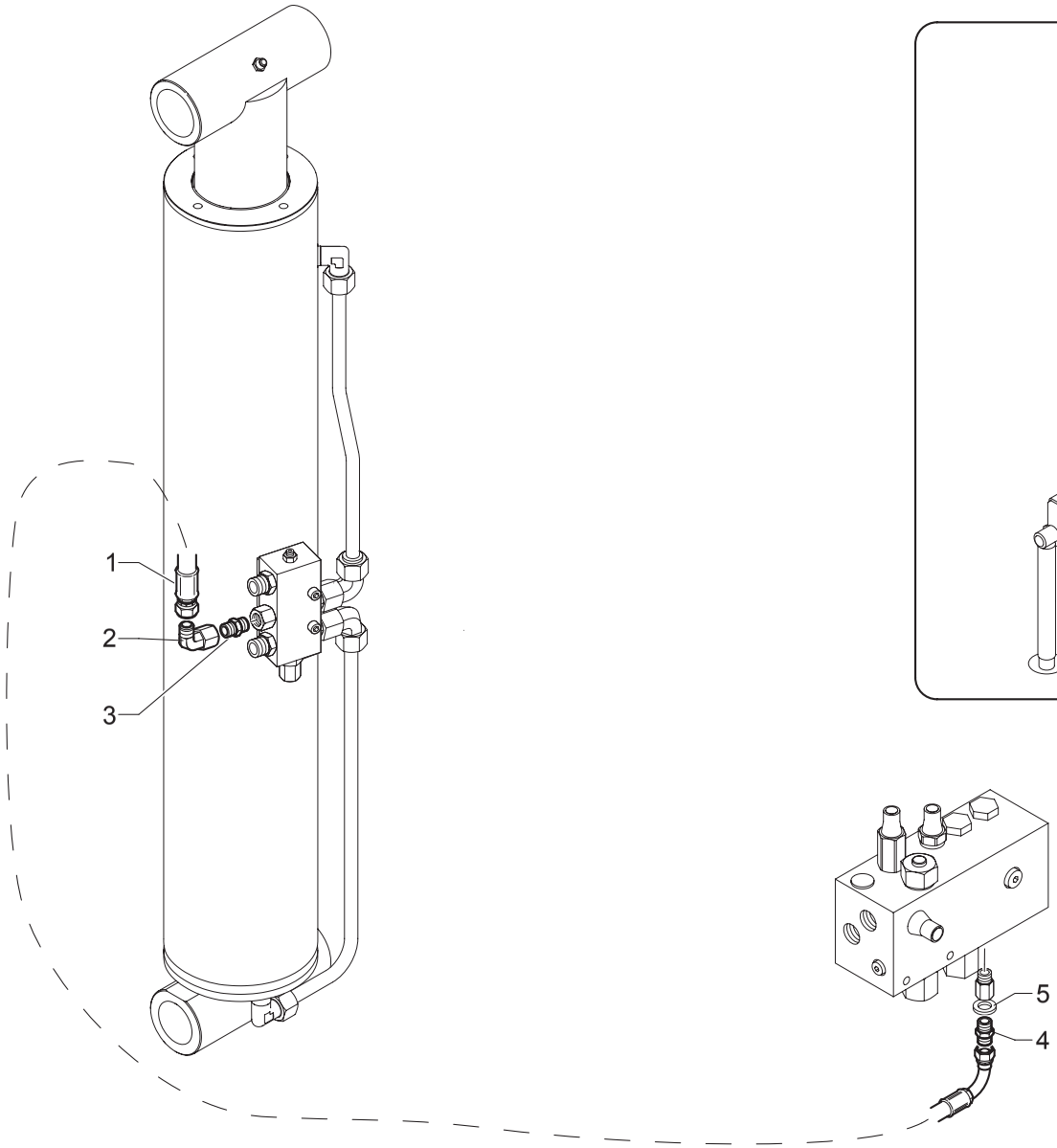

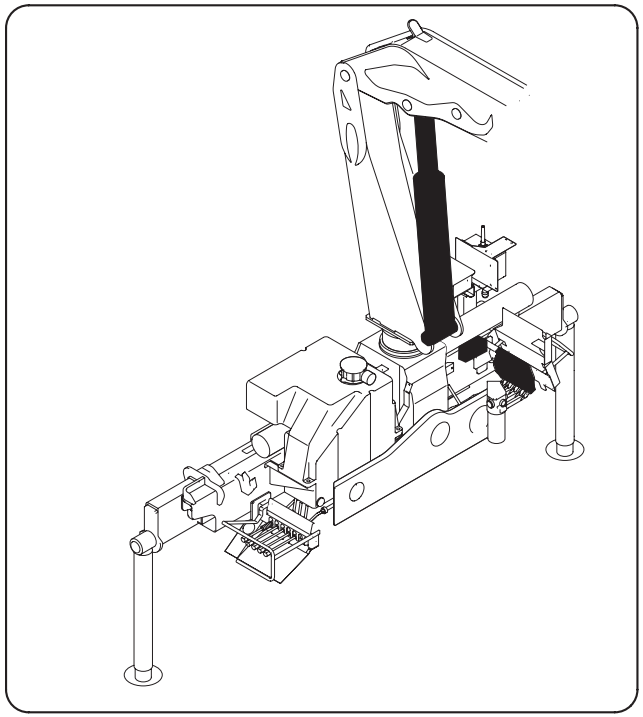

UNISTUDIO - Moder

POS.	N°CODICE	Q	DESCRIZIONE	DESIGNATION	BENENNUNG	DESCRIPTION	DENOMINACIONES
1	485086	1	TUBO IN GOMMA	TUYAU FLEX.	SCHLAUCH	HOSE	LATIGUILLO
2	409436	1	RACCORDO	RACCORD	FITTING	FITTING	RACOR
3	409426	1	RACCORDO	RACCORD	FITTING	FITTING	RACOR
4	409663	1	RACCORDO	RACCORD	FITTING	FITTING	RACOR
5	417096	1	RONDELLA DOWTY B S PP45-B	RONDELLE	SCHEIBE	WASHER	ARANDELA

COMANDO 1° - 2° ATTIVAZIONE INTERNA

** Commande 1ère et 2ème activation interne*
** 1st and 2nd internal activation control*
** 1. und 2. Innenbetätigungssteuerung*
** Mando primera y segunda activación interna*

TAV. SV.01.01

matr. G.A23.0001

PM 12521-22
PM 12521-22 S
PM 13521-22 SP

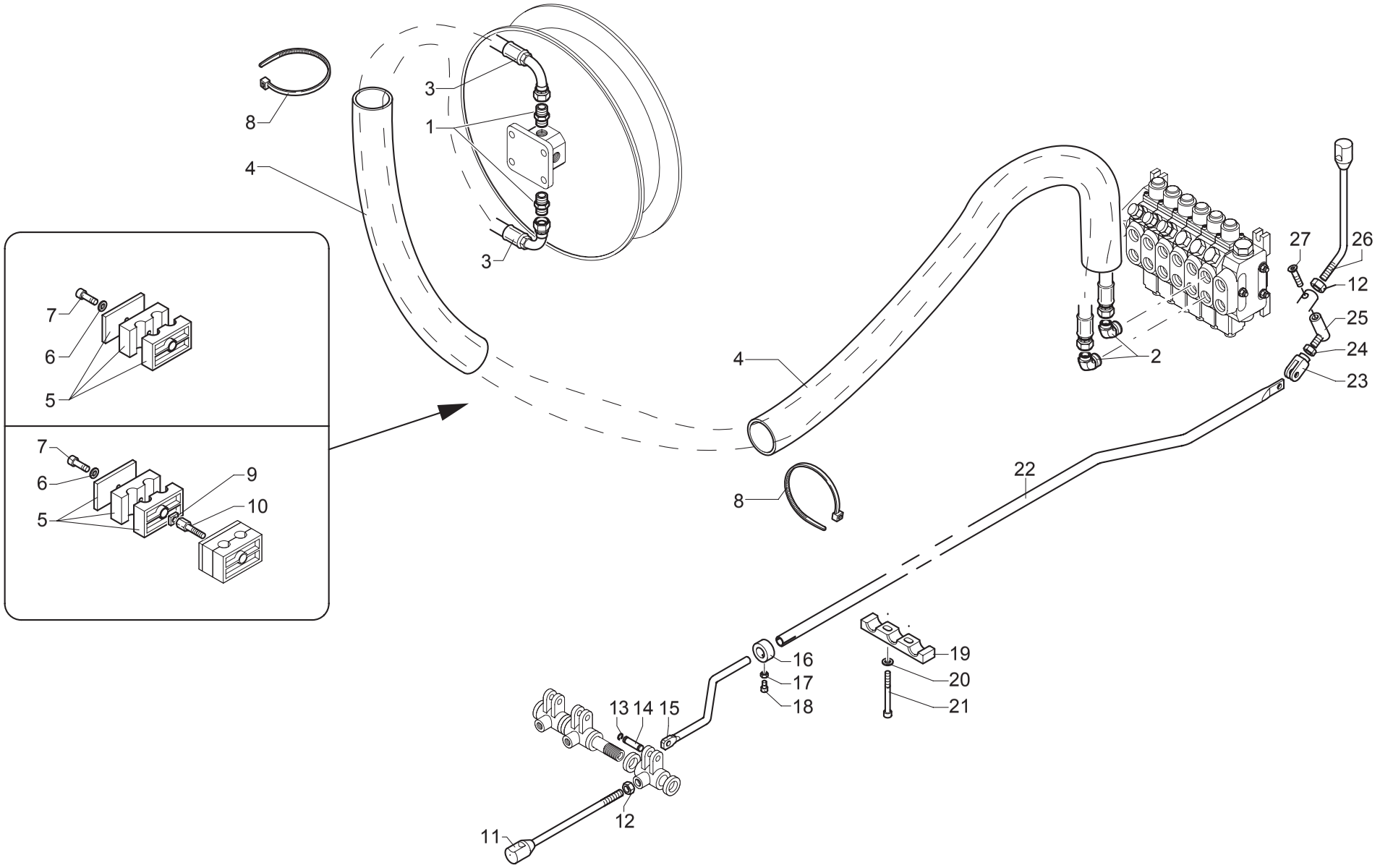

UNISTUDIO - Moder

POS.	N°CODICE	Q	DESCRIZIONE	DESIGNATION	BENENNUNG	DESCRIPTION	DENOMINACIONES
1	409253	2	RACCORDO	RACCORD	FITTING	FITTING	RACOR
2	409478	2	RACCORDO	RACCORD	FITTING	FITTING	RACOR
3	485808	2	TUBO IN GOMMA	TUYAU FLEX.	SCHLAUCH	HOSE	LATIGUILLO
4	276061	2	GUAINA	GAINE	MANTEL	SHEATH	MANGERA
5	353079	1	MORSETTO	ARRETOIR	KLEMME	FASTENING UNIT	CONEXION
6	417025	1	RONDELLA SCHNORR S8 ZN	RONDELLE	SCHEIBE	WASHER	ARANDELA
7	497134	1	VITE TCEI M8X35 UNI 5931 8.8	VIS	SCHRAUBE	SCREW	TORNILLO
8	207025	4	FASCETTA	COLLIER	HALTEBAND	CLAMP	ABRAZADERA
9	417210	1	RONDELLA	RONDELLE	SCHEIBE	WASHER	ARANDELA
10	498116	1	VITE	VIS	SCHRAUBE	SCREW	TORNILLO
11	120051	1	LEVA	LEVIER	HEBEL	LEVER	PALANCA
12	191036	2	DADO M10 UNI 5588	ECROU	MUTTER	NUT	TUERCA
13	109159	2	ANELLO 6 UNI 7434	JOINT D'ARRET	SPRENGRING	SPRING RING	SEEGER
14	379322	1	PERNO	AXE	BOLZEN	PIN	BULON
15	283018	1	TIRANTE	TIRANT	ZUGSTANGE	TIEROD	BARILLA
16	112167	1	BOCCOLA	DOUILLE	BUCHSE	BUSHING	CASQUILLO
17	191062	1	DADO M6 UNI 5589	ECROU	MUTTER	NUT	TUERCA
18	497118	1	VITE TCEI M6X16 UNI 5931 8.8	VIS	SCHRAUBE	SCREW	TORNILLO
19	353068	1	MORSETTO	ARRETOIR	KLEMME	FASTENING UNIT	CONEXION
20	417004	2	ROSETTA 8,4X17 UNI 6592	RONDELLE	SCHEIBE	WASHER	ARANDELA
21	497141	2	VITE TCEI M8X80 UNI 5931 8.8	VIS	SCHRAUBE	SCREW	TORNILLO
22	481263	1	TIRANTE	TIRANT	ZUGSTANGE	TIEROD	BARILLA
23	220018	1	FORCELLA	FOURCHE	GABEL	YOKE	HORQUILLA
24	191035	1	DADO M8 UNI 5588	ECROU	MUTTER	NUT	TUERCA
25	379727	1	PERNO	AXE	BOLZEN	PIN	BULON
26	120746	1	LEVA	LEVIER	HEBEL	LEVER	PALANCA

COMANDO 1° - 2° ATTIVAZIONE INTERNA

** Commande 1ère et 2ème activation interne*
** 1st and 2nd internal activation control*
** 1. und 2. Innenbetätigungssteuerung*
** Mando primera y segunda activación interna*

TAV. SV.01.01

matr. G.A23.0001

PM 12521-22
PM 12521-22 S
PM 13521-22 SP

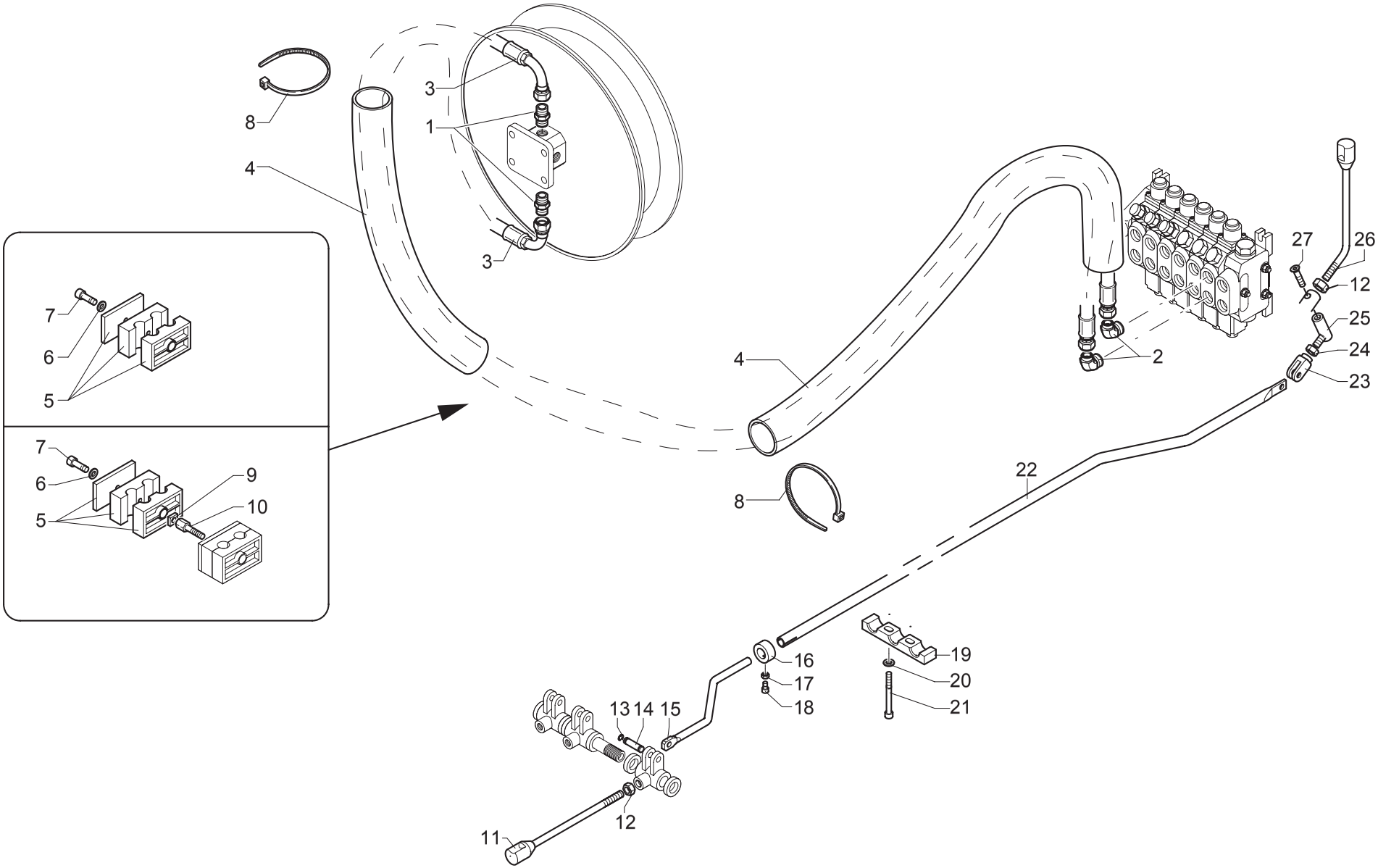

UNISTUDIO - Moder

POS.	N°CODICE	Q	DESCRIZIONE	DESIGNATION	BENENNUNG	DESCRIPTION	DENOMINACIONES
27	498099	1	VITE TSPEI M8X30 UNI 5933 10.9	VIS	SCHRAUBE	SCREW	TORNILLO

COMPL. COMANDO 1a ATTIVAZIONE INTERNA

** Materiel de complètement 1ère activation interne*
** Completing material 1st internal activation*
** Vervollständigung 1. Innenbetätigungssteuerung*
** Compl. mando primera activación interna*

TAV. SV.02.01

matr. G.A23.0001

PM 12521-22
PM 12521-22 S
PM 13521-22 SP

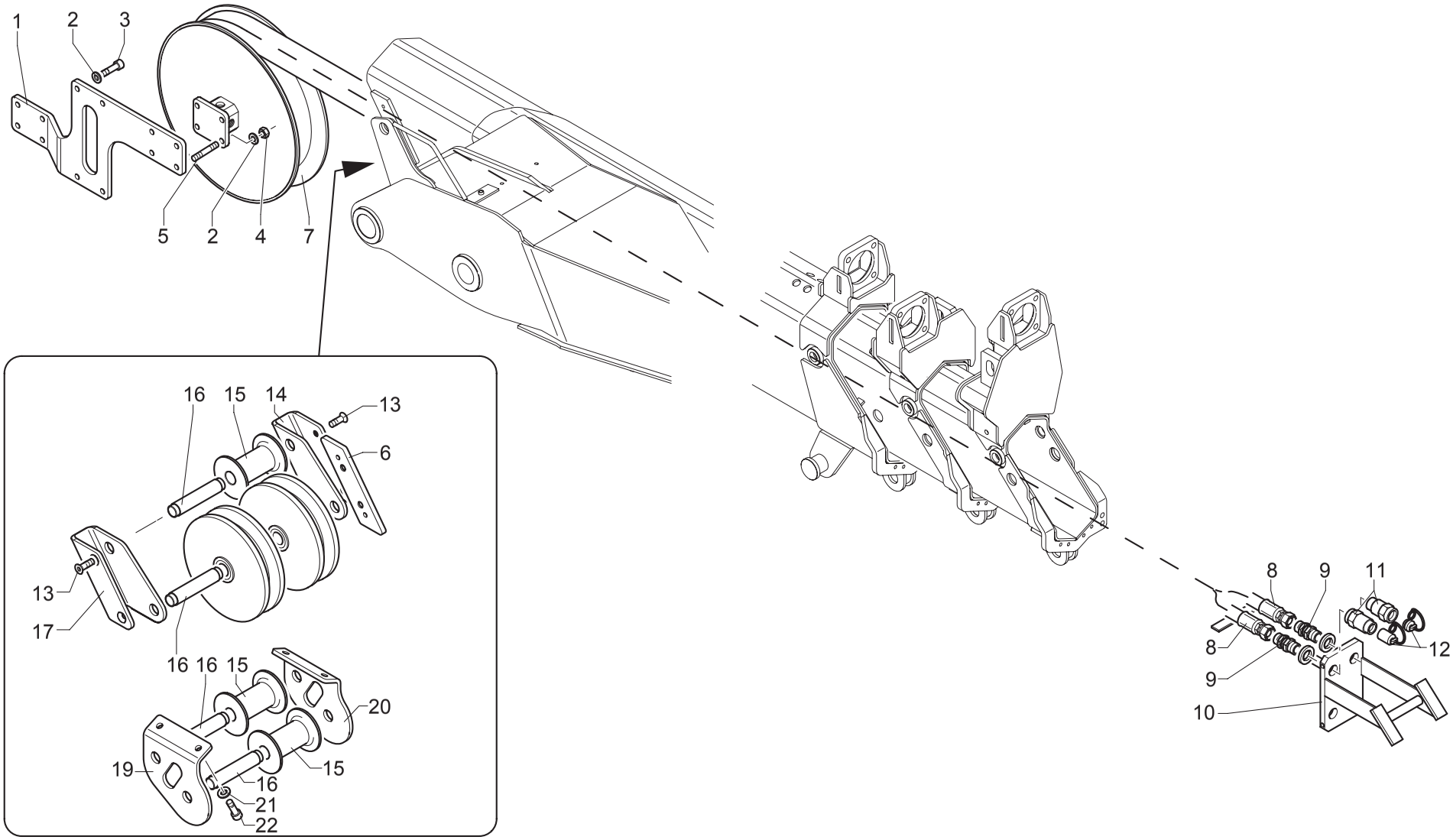

UNISTUDIO - Moder

POS.	N°CODICE	Q	DESCRIZIONE	DESIGNATION	BENENNUNG	DESCRIPTION	DENOMINACIONES
1	466561	1	SUPPORTO	SUPPORT	TRAEGER	SUPPORT	SOPORTE
2	417005	8	ROSETTA 10,5X21 UNI 6592	RONDELLE	SCHEIBE	WASHER	ARANDELA
3	497145	4	VITE TCEI M10X25 UNI 5931 8.8	VIS	SCHRAUBE	SCREW	TORNILLO
4	191092	4	DADO M10 UNI 7473	ECROU	MUTTER	NUT	TUERCA
5	497353	4	VITE TCEI M10X35 UNI 5931 8.8	VIS	SCHRAUBE	SCREW	TORNILLO
6	466613	1	SUPPORTO (PER LC)	SUPPORT	TRAEGER	SUPPORT	SOPORTE
7	469034	1	AVVOLGITUBO	ENROULEUR	SCHLAUCHWICKLER	HOSE REEL	ENROLLADOR
8	486447	1	TUBO IN GOMMA	TUYAU FLEX.	SCHLAUCH	HOSE	LATIGUILLO
9	409735	2	RACCORDO	RACCORD	FITTING	FITTING	RACOR
10	466566	1	SUPPORTO	SUPPORT	TRAEGER	SUPPORT	SOPORTE
11	124001	2	ATTACCO RAPIDO	ATTACHE RAPIDE	SCHNELLE VERBINDUNG	QUICK COUPLING	ENCHUFE RAPIDO
12	288910	2	TAPPO	BOUCHON	VERSCHLUSS	CAP	TAPON
13	497248	4	VITE TSPEI M8X16 UNI 5933 8.8	VIS	SCHRAUBE	SCREW	TORNILLO
13	497908	2	VITE (PER LC) TSPEI M8X12 UNI 5933 8.8	VIS	SCHRAUBE	SCREW	TORNILLO
14	466562	1	SUPPORTO	SUPPORT	TRAEGER	SUPPORT	SOPORTE
15	429066	3	RULLO	GALET	ROLLE	ROLLER	RODILLO
16	380231	4	PERNO	AXE	BOLZEN	PIN	BULON
17	466563	1	SUPPORTO	SUPPORT	TRAEGER	SUPPORT	SOPORTE
18	405005	2	PULEGGIA	POULIE	SCHEIBE	PULLEY	POLEA
19	466564	1	SUPPORTO	SUPPORT	TRAEGER	SUPPORT	SOPORTE
20	466565	1	SUPPORTO	SUPPORT	TRAEGER	SUPPORT	SOPORTE
21	417004	4	ROSETTA 8,4X17 UNI 6592	RONDELLE	SCHEIBE	WASHER	ARANDELA
22	497130	4	VITE TCEI M8X16 UNI 5931 8.8	VIS	SCHRAUBE	SCREW	TORNILLO

COMPL. COMANDO 2a ATTIVAZIONE INTERNA

** Materiel de complètement 2ème activation interne*
** Completing material 2nd internal activation*
** Vervollständigung 2. Innenbetätigungssteuerung*
** Compl. mando segunda activación interna*

TAV. SV.03.01

matr. G.A23.0001

PM 12521-22
PM 12521-22 S
PM 13521-22 SP

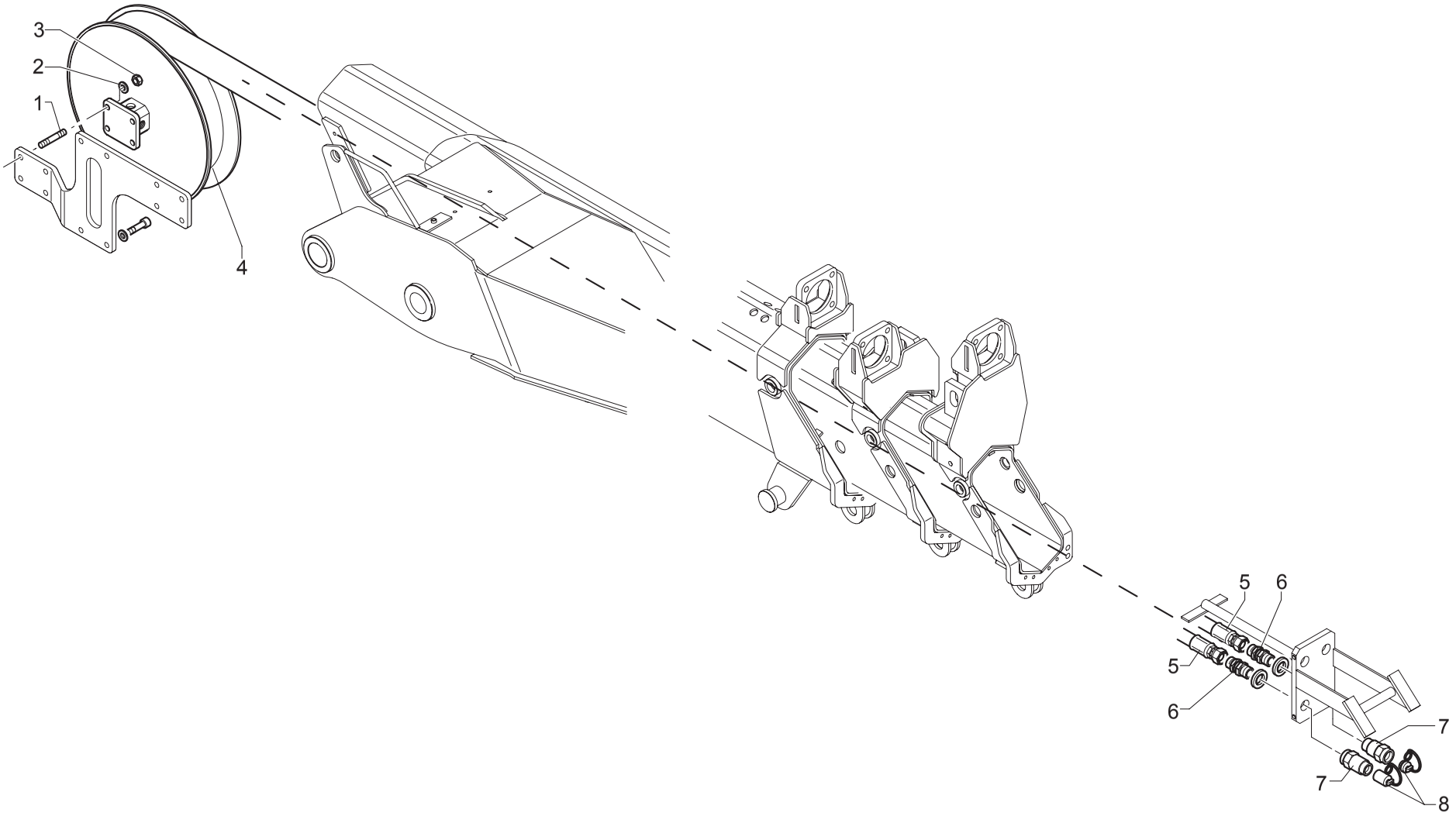

UNISTUDIO - Moder

POS.	N°CODICE	Q	DESCRIZIONE	DESIGNATION	BENENNUNG	DESCRIPTION	DENOMINACIONES
1	497353	4	VITE TCEI M10X35 UNI 5931 8.8	VIS	SCHRAUBE	SCREW	TORNILLO
2	417005	4	ROSETTA 10,5X21 UNI 6592	RONDELLE	SCHEIBE	WASHER	ARANDELA
3	191092	4	DADO M10 UNI 7473	ECROU	MUTTER	NUT	TUERCA
4	469034	1	AVVOLGITUBO	ENROULEUR	SCHLAUCHWICKLER	HOSE REEL	ENROLLADOR
5	486447	1	TUBO IN GOMMA	TUYAU FLEX.	SCHLAUCH	HOSE	LATIGUILLO
6	409735	2	RACCORDO	RACCORD	FITTING	FITTING	RACOR
7	124001	2	ATTACCO RAPIDO	ATTACHE RAPIDE	SCHNELLE VERBINDUNG	QUICK COUPLING	ENCHUFE RAPIDO
8	288911	2	TAPPO	BOUCHON	VERSCHLUSS	CAP	TAPON

COMANDO 1°- 2° ATTIVAZIONE CON RACCOGLITUBO

** Materiel de complètement 2ème activation interne*
** Completing material 2nd internal activation*
** Vervollständigung 2. Innenbetätigungssteuerung*
** Compl. mando segunda activación interna*

TAV. SV.04.01

matr. G.A23.0001

PM 12,5
PM 12,5 S
PM 13,5 SP

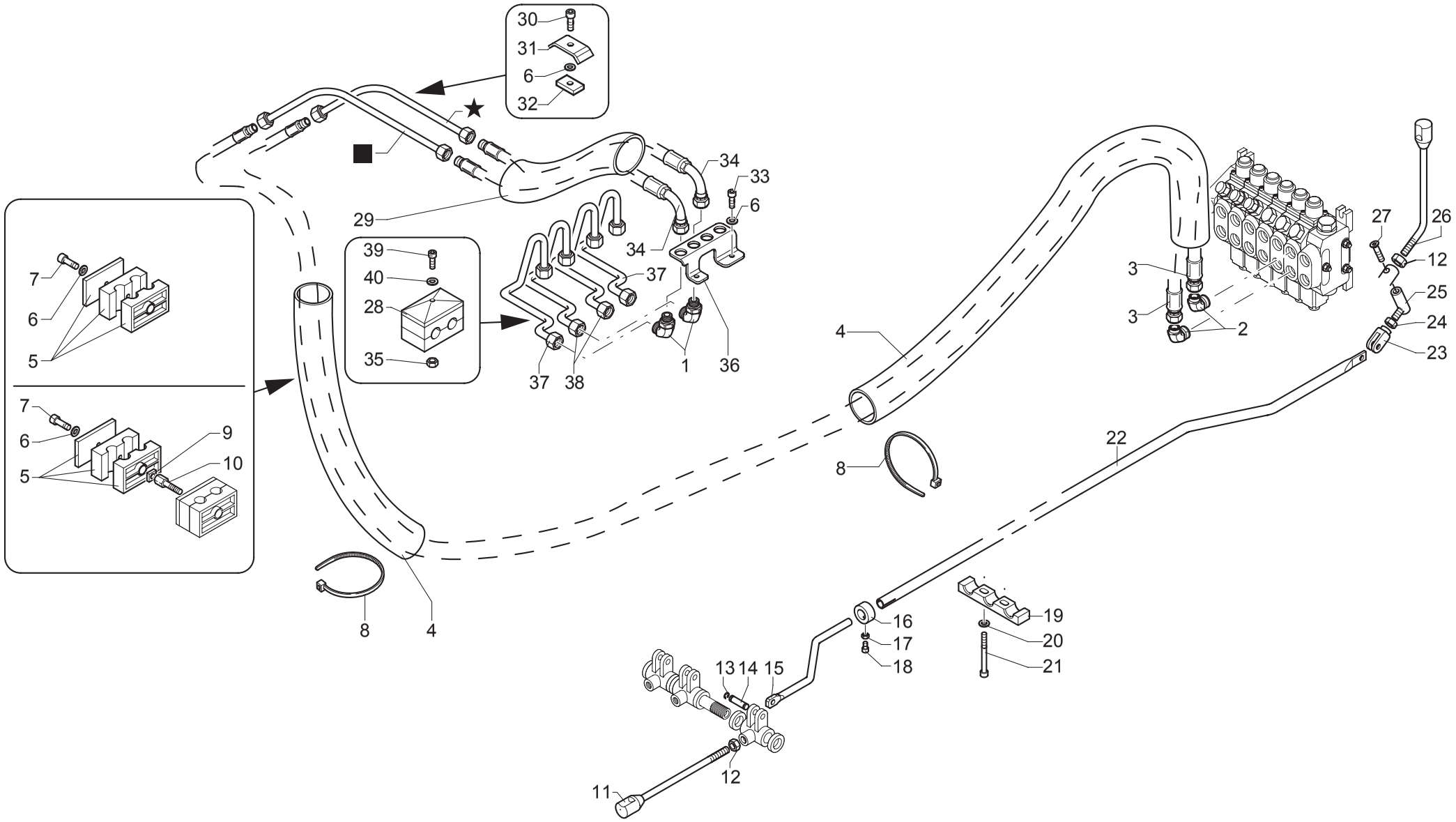

UNISTUDIO - Moder

POS.	N°CODICE	Q	DESCRIZIONE	DESIGNATION	BENENNUNG	DESCRIPTION	DENOMINACIONES
1	409481	2	RACCORDO	RACCORD	FITTING	FITTING	RACOR
2	409478	2	RACCORDO	RACCORD	FITTING	FITTING	RACOR
3	486415	2	TUBO IN GOMMA	TUYAU FLEX.	SCHLAUCH	HOSE	LATIGUILLO
4	276061	2	GUAINA	GAINE	MANTEL	SHEATH	MANGERA
5	353079	2	MORSETTO	ARRETOIR	KLEMME	FASTENING UNIT	CONEXION
6	417025	7	RONDELLA SCHNORR S8 ZN	RONDELLE	SCHEIBE	WASHER	ARANDELA
7	497134	2	VITE TCEI M8X35 UNI 5931 8.8	VIS	SCHRAUBE	SCREW	TORNILLO
8	207025	6	FASCETTA	COLLIER	HALTEBAND	CLAMP	ABRAZADERA
9	417210	1	RONDELLA	RONDELLE	SCHEIBE	WASHER	ARANDELA
10	498116	1	VITE	VIS	SCHRAUBE	SCREW	TORNILLO
11	120051	1	LEVA	LEVIER	HEBEL	LEVER	PALANCA
12	191036	2	DADO M10 UNI 5588	ECROU	MUTTER	NUT	TUERCA
13	109159	2	ANELLO 6 UNI 7434	JOINT D'ARRET	SPRENGRING	SPRING RING	SEEGER
14	379322	1	PERNO	AXE	BOLZEN	PIN	BULON
15	283018	1	TIRANTE	TIRANT	ZUGSTANGE	TIEROD	BARILLA
16	112167	1	BOCCOLA	DOUILLE	BUCHSE	BUSHING	CASQUILLO
17	191062	1	DADO M6 UNI 5589	ECROU	MUTTER	NUT	TUERCA
18	497118	1	VITE TCEI M6X16 UNI 5931 8.8	VIS	SCHRAUBE	SCREW	TORNILLO
19	353068	1	MORSETTO	ARRETOIR	KLEMME	FASTENING UNIT	CONEXION
20	417004	2	ROSETTA 8,4X17 UNI 6592	RONDELLE	SCHEIBE	WASHER	ARANDELA
21	497141	2	VITE TCEI M8X80 UNI 5931 8.8	VIS	SCHRAUBE	SCREW	TORNILLO
22	481263	1	TIRANTE	TIRANT	ZUGSTANGE	TIEROD	BARILLA
23	220018	1	FORCELLA	FOURCHE	GABEL	YOKE	HORQUILLA
24	191035	1	DADO M8 UNI 5588	ECROU	MUTTER	NUT	TUERCA
25	379727	1	PERNO	AXE	BOLZEN	PIN	BULON
26	120746	1	LEVA	LEVIER	HEBEL	LEVER	PALANCA

COMANDO 1°- 2° ATTIVAZIONE CON RACCOGLITUBO

** Materiel de complètement 2ème activation interne*
** Completing material 2nd internal activation*
** Vervollständigung 2. Innenbetätigungssteuerung*
** Compl. mando segunda activación interna*

TAV. SV.04.01

matr. G.A23.0001

PM 12,5
PM 12,5 S
PM 13,5 SP

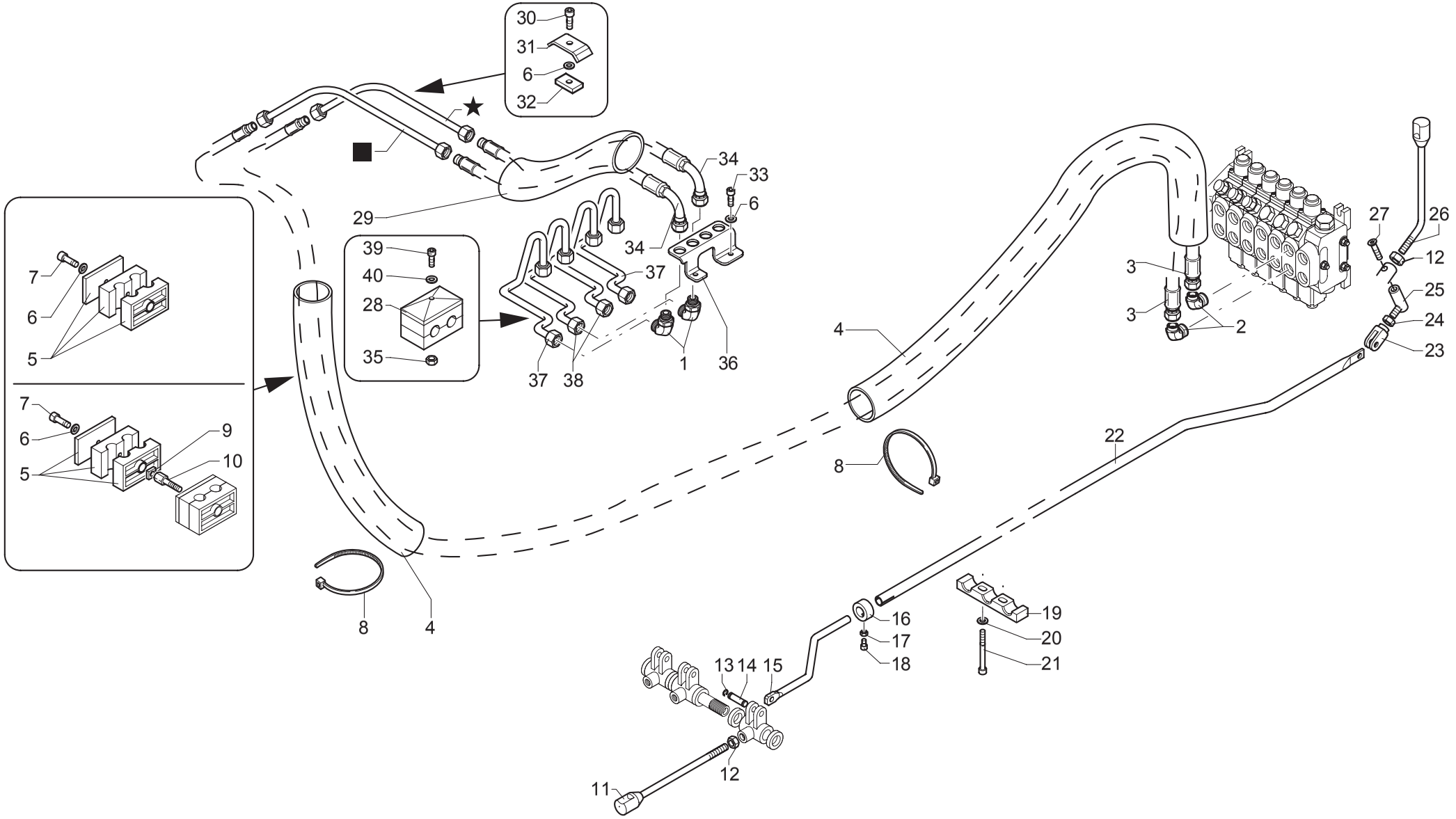

UNISTUDIO - Moder

POS.	N°CODICE	Q	DESCRIZIONE	DESIGNATION	BENENNUNG	DESCRIPTION	DENOMINACIONES
27	498099	1	VITE TSPEI M8X30 UNI 5933 10.9	VIS	SCHRAUBE	SCREW	TORNILLO
28	353076	1	MORSETTO	ARRETOIR	KLEMME	FASTENING UNIT	CONEXION
29	276037	1	GUAINA	GAINE	MANTEL	SHEATH	MANGERA
30	497130	3	VITE TCEI M8X16 UNI 5931 8.8	VIS	SCHRAUBE	SCREW	TORNILLO
31	353099	3	MORSETTO	ARRETOIR	KLEMME	FASTENING UNIT	CONEXION
32	262170	3	SPESSORE	CALE D'EPAISSEUR	BEILAGE	SHIM	ESPESOR
33	497209	2	VITE TCEI M8X12 UNI 5931 8.8	VIS	SCHRAUBE	SCREW	TORNILLO
34	486998	2	TUBO IN GOMMA	TUYAU FLEX.	SCHLAUCH	HOSE	LATIGUILLO
35	191162	1	DADO M6 UNI 7473	ECROU	MUTTER	NUT	TUERCA
36	466611	1	SUPPORTO	SUPPORT	TRAEGER	SUPPORT	SOPORTE
37	493544	1	TUBO IN FERRO 1° ATTIVAZIONE	TUYAU EN FER	EISEN-ROHR	IRON PIPE	TUBO DE HIERRO
37	493537	1	TUBO IN FERRO 2° ATTIVAZIONE	TUYAU EN FER	EISEN-ROHR	IRON PIPE	TUBO DE HIERRO
38	493543	1	TUBO IN FERRO 1° ATTIVAZIONE	TUYAU EN FER	EISEN-ROHR	IRON PIPE	TUBO DE HIERRO
38	493542	1	TUBO IN FERRO 2° ATTIVAZIONE	TUYAU EN FER	EISEN-ROHR	IRON PIPE	TUBO DE HIERRO
39	497125	1	VITE TCEI M6X50 UNI 5931 8.8	VIS	SCHRAUBE	SCREW	TORNILLO
40	417003	1	ROSETTA 6,4X12,5 UNI 6592	RONDELLE	SCHEIBE	WASHER	ARANDELA
★	493535	1	TUBO IN FERRO 1° ATTIVAZIONE	TUYAU EN FER	EISEN-ROHR	IRON PIPE	TUBO DE HIERRO
★	493518	1	TUBO IN FERRO 2° ATTIVAZIONE	TUYAU EN FER	EISEN-ROHR	IRON PIPE	TUBO DE HIERRO
■	493535	1	TUBO IN FERRO 1° ATTIVAZIONE	TUYAU EN FER	EISEN-ROHR	IRON PIPE	TUBO DE HIERRO
■	493517	1	TUBO IN FERRO 2° ATTIVAZIONE	TUYAU EN FER	EISEN-ROHR	IRON PIPE	TUBO DE HIERRO

COMPL. COMANDO 1°-2° ATTIVAZIONE CON RACCOGLITUBO

** Complètement commande 1ère - 2ème activation avec serre-tubes*
** Vervollständigung Steuerung 1. - 2. Aktivierung mit Schlauchaufnahme*
** 1st - 2nd activation control with pipe holder*
** Completar mando 1ª - 2ª activación con recogetubo*

TAV. SV.05.01 1/2

matr. G.A23.0001

PM 12523-24
PM 12523-24 S
PM 13523-24 SP

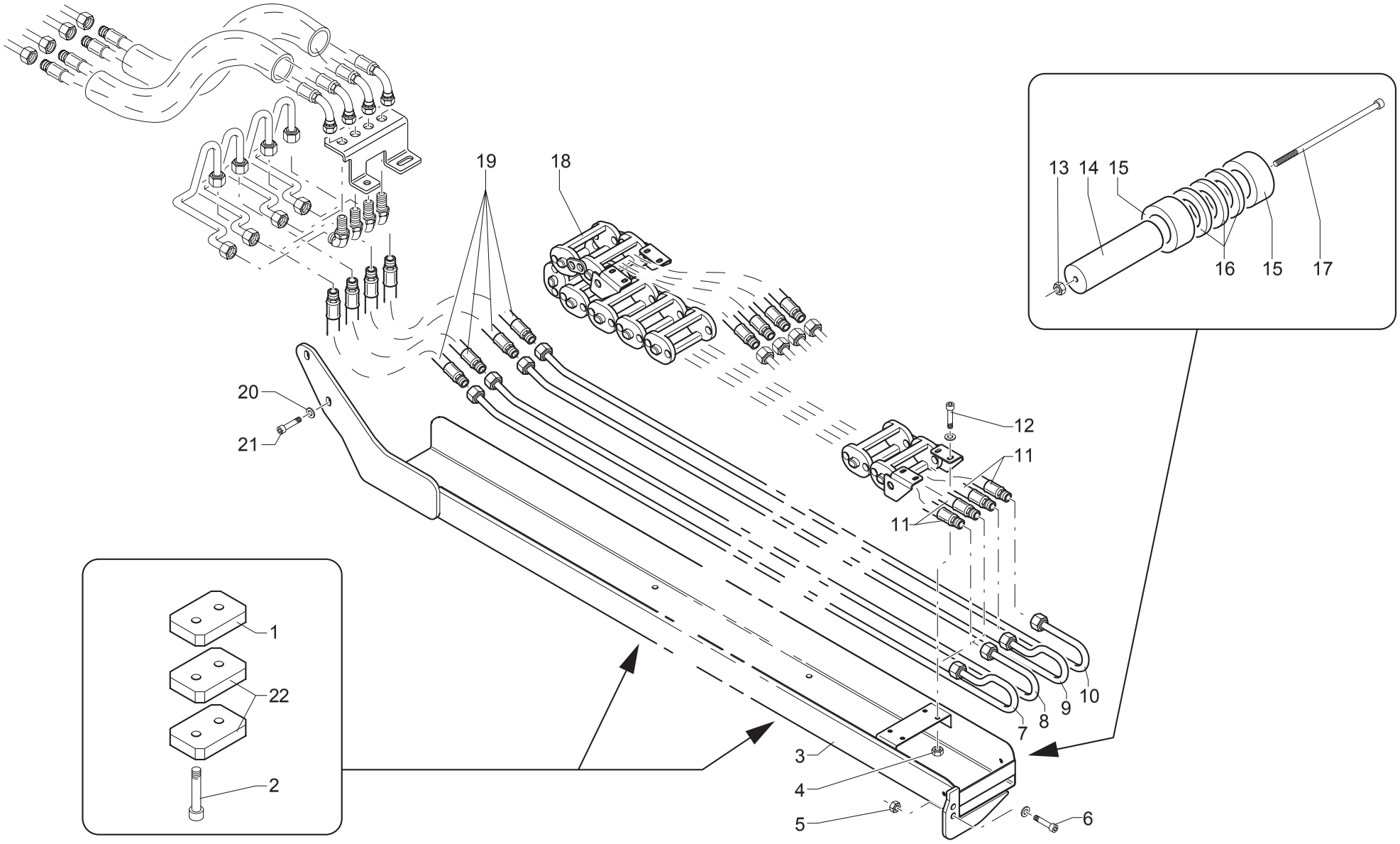

UNISTUDIO - Moder

POS.	N°CODICE	Q	DESCRIZIONE	DESIGNATION	BENENNUNG	DESCRIPTION	DENOMINACIONES
1	459146	2	STAFFA	ETRIER	BRIDE	BRACKET	PLETINA
2	497216	4	VITE TSPEI M8X40 UNI 5933 8.8	VIS	SCHRAUBE	SCREW	TORNILLO
3	466634	1	SUPPORTO	SUPPORT	TRAEGER	SUPPORT	SOPORTE
4	191162	8	DADO M6 UNI 7473	ECROU	MUTTER	NUT	TUERCA
5	191092	2	DADO M10 UNI 7473	ECROU	MUTTER	NUT	TUERCA
6	497147	2	VITE TCEI M10X35 UNI 5931 8.8	VIS	SCHRAUBE	SCREW	TORNILLO
7	493538	1	TUBO IN FERRO	TUYAU EN FER	EISEN-ROHR	IRON PIPE	TUBO DE HIERRO
8	493539	1	TUBO IN FERRO	TUYAU EN FER	EISEN-ROHR	IRON PIPE	TUBO DE HIERRO
9	493540	1	TUBO IN FERRO	TUYAU EN FER	EISEN-ROHR	IRON PIPE	TUBO DE HIERRO
10	493541	1	TUBO IN FERRO	TUYAU EN FER	EISEN-ROHR	IRON PIPE	TUBO DE HIERRO
11	486568	4	TUBO IN GOMMA	TUYAU FLEX.	SCHLAUCH	HOSE	LATIGUILLO
12	497118	8	VITE TCEI M6X16 UNI 5931 8.8	VIS	SCHRAUBE	SCREW	TORNILLO
13	191125	1	DADO M6 UNI 7474	ECROU	MUTTER	NUT	TUERCA
14	429067	1	RULLO	GALET	ROLLE	ROLLER	RODILLO
15	136647	2	DISTANZIALE	ENTRETOISE	DISTANZHULSE	SPACER	DISTANCIADOR
16	136654	3	DISTANZIALE	ENTRETOISE	DISTANZHULSE	SPACER	DISTANCIADOR
17	497357	1	VITE	VIS	SCHRAUBE	SCREW	TORNILLO
18	151038	1	CATENA PORTACAVI	CHAINE	KETTE	CHAIN	CADENA
19	486433	4	TUBO IN GOMMA	TUYAU FLEX.	SCHLAUCH	HOSE	LATIGUILLO
20	417025	2	RONDELLA SCHNORR S8 ZN	RONDELLE	SCHEIBE	WASHER	ARANDELA
21	497131	2	VITE TCEI M8X20 UNI 5931 8.8	VIS	SCHRAUBE	SCREW	TORNILLO
22	262027	4	SPESSORE	CALE D'EPAISSEUR	BEILAGE	SHIM	ESPESOR

COMPL. COMANDO 1°-2° ATTIVAZIONE CON RACCOGLITUBO

** Complètement commande 1ère - 2ème activation avec serre-tubes*
** Vervollständigung Steuerung 1. - 2. Aktivierung mit Schlauchaufnahme*
** 1st - 2nd activation control with pipe holder*
** Completar mando 1ª - 2ª activación con recogetubo*

TAV. SV.05.01 2/2

matr. G.A23.0001

PM 12523-24
PM 12523-24 S
PM 13523-24 SP

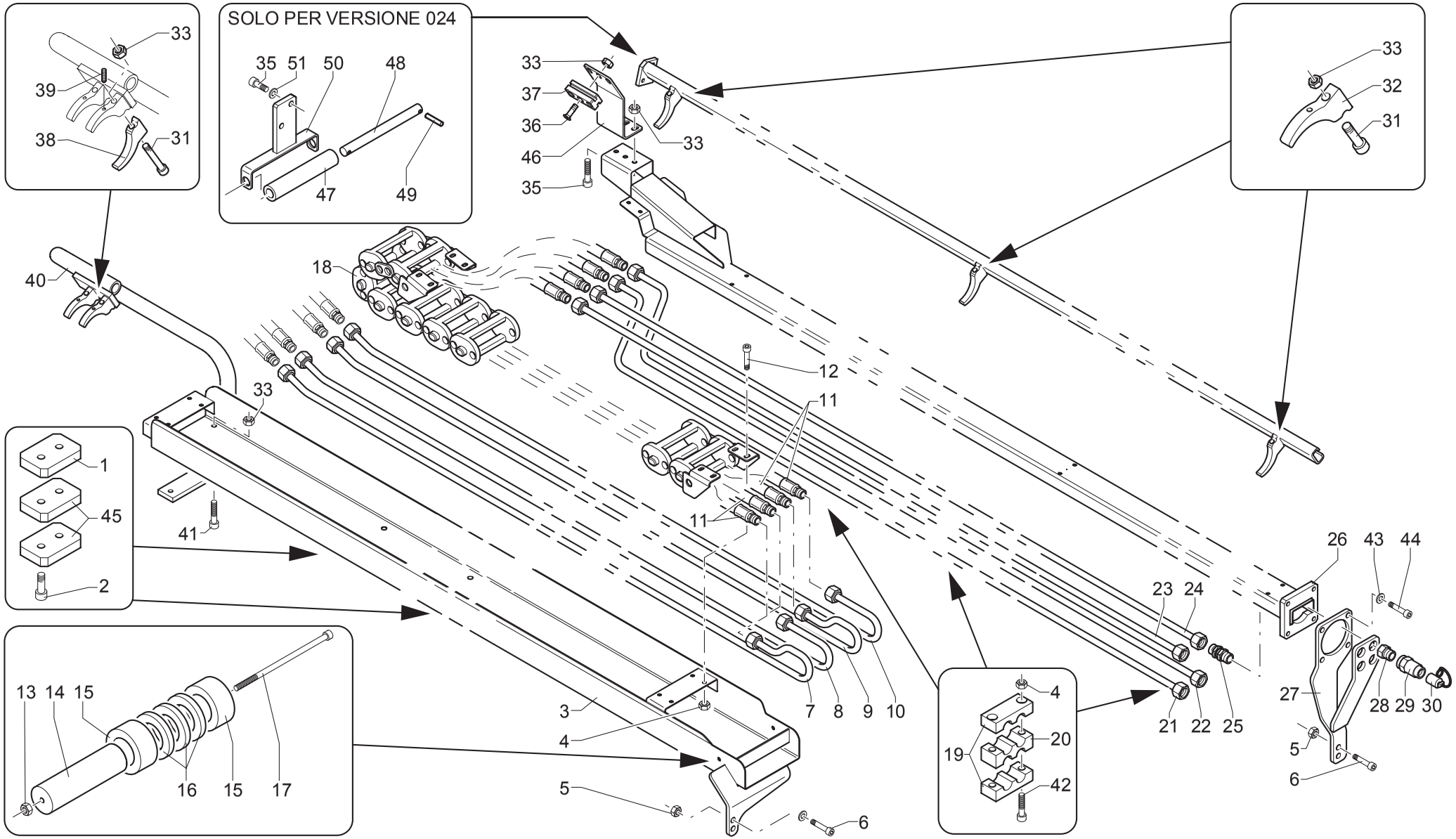

UNISTUDIO - Moder

POS.	N°CODICE	Q	DESCRIZIONE	DESIGNATION	BENENNUNG	DESCRIPTION	DENOMINACIONES
1	459146	2	STAFFA	ETRIER	BRIDE	BRACKET	PLETINA
2	497216	4	VITE TSPEI M8X40 UNI 5933 8.8	VIS	SCHRAUBE	SCREW	TORNILLO
3	466635	1	SUPPORTO	SUPPORT	TRAEGER	SUPPORT	SOPORTE
4	191162	14	DADO M6 UNI 7473	ECROU	MUTTER	NUT	TUERCA
5	191092	4	DADO M10 UNI 7473	ECROU	MUTTER	NUT	TUERCA
6	497147	4	VITE TCEI M10X35 UNI 5931 8.8	VIS	SCHRAUBE	SCREW	TORNILLO
7	493538	1	TUBO IN FERRO	TUYAU EN FER	EISEN-ROHR	IRON PIPE	TUBO DE HIERRO
8	493539	1	TUBO IN FERRO	TUYAU EN FER	EISEN-ROHR	IRON PIPE	TUBO DE HIERRO
9	493540	1	TUBO IN FERRO	TUYAU EN FER	EISEN-ROHR	IRON PIPE	TUBO DE HIERRO
10	493541	1	TUBO IN FERRO	TUYAU EN FER	EISEN-ROHR	IRON PIPE	TUBO DE HIERRO
11	486626	4	TUBO IN GOMMA	TUYAU FLEX.	SCHLAUCH	HOSE	LATIGUILLO
12	497118	8	VITE TCEI M6X16 UNI 5931 8.8	VIS	SCHRAUBE	SCREW	TORNILLO
13	191125	1	DADO M6 UNI 7474	ECROU	MUTTER	NUT	TUERCA
14	429067	1	RULLO	GALET	ROLLE	ROLLER	RODILLO
15	136647	2	DISTANZIALE	ENTRETOISE	DISTANZHULSE	SPACER	DISTANCIADOR
16	136654	3	DISTANZIALE	ENTRETOISE	DISTANZHULSE	SPACER	DISTANCIADOR
17	497357	1	VITE	VIS	SCHRAUBE	SCREW	TORNILLO
18	151039	1	CATENA PORTACAVI	CHAINE	KETTE	CHAIN	CADENA
19	353114	3	MORSETTO	ARRETOIR	KLEMME	FASTENING UNIT	CONEXION
20	353115	3	MORSETTO	ARRETOIR	KLEMME	FASTENING UNIT	CONEXION
21	493513	1	TUBO IN FERRO	TUYAU EN FER	EISEN-ROHR	IRON PIPE	TUBO DE HIERRO
22	493516	1	TUBO IN FERRO	TUYAU EN FER	EISEN-ROHR	IRON PIPE	TUBO DE HIERRO
23	493514	1	TUBO IN FERRO	TUYAU EN FER	EISEN-ROHR	IRON PIPE	TUBO DE HIERRO
24	493515	1	TUBO IN FERRO	TUYAU EN FER	EISEN-ROHR	IRON PIPE	TUBO DE HIERRO
25	409418	4	RACCORDO	RACCORD	FITTING	FITTING	RACOR
26	466637	1	SUPPORTO	SUPPORT	TRAEGER	SUPPORT	SOPORTE

COMPL. COMANDO 1°-2° ATTIVAZIONE CON RACCOGLITUBO

** Complètement commande 1ère - 2ème activation avec serre-tubes*
** Vervollständigung Steuerung 1. - 2. Aktivierung mit Schlauchaufnahme*
** 1st - 2nd activation control with pipe holder*
** Completar mando 1ª - 2ª activación con recogetubo*

TAV. SV.05.01 2/2

matr. G.A23.0001

PM 12523-24
PM 12523-24 S
PM 13523-24 SP

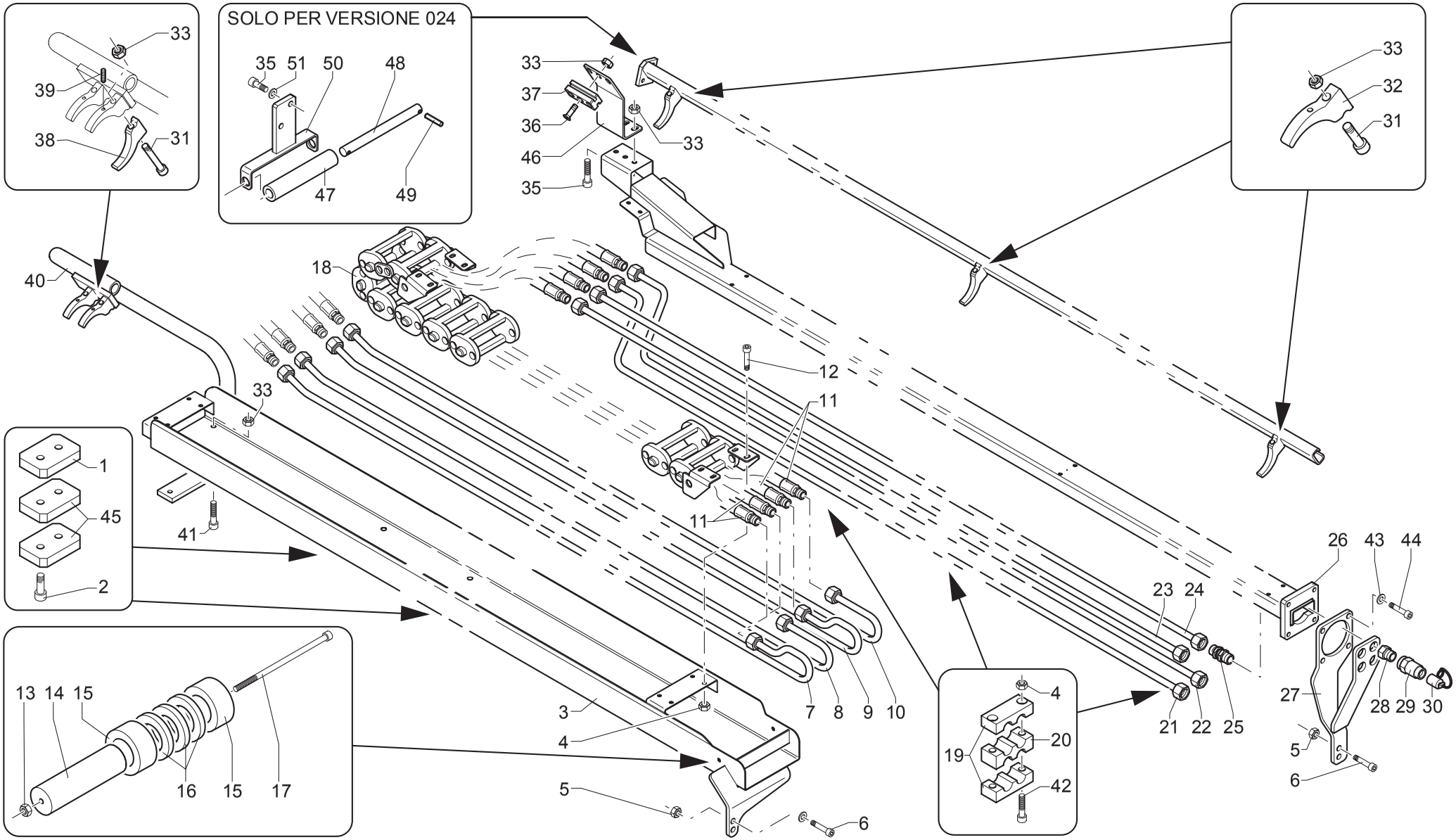

UNISTUDIO - Moder

POS.	N°CODICE	Q	DESCRIZIONE	DESIGNATION	BENENNUNG	DESCRIPTION	DENOMINACIONES
27	466638	1	SUPPORTO (per versione 023)	SUPPORT	TRAEGER	SUPPORT	SOPORTE
27	466646	1	SUPPORTO (per versione 024)	SUPPORT	TRAEGER	SUPPORT	SOPORTE
28	409292	4	RACCORDO	RACCORD	FITTING	FITTING	RACOR
29	124006	4	ATTACCO RAPIDO	ATTACHE RAPIDE	SCHNELLE VERBINDUNG	QUICK COUPLING	ENCHUFE RAPIDO
30	288908	2	TAPPO 1° ATTIVAZIONE	BOUCHON	VERSCHLUSS	CAP	TAPON
30	288909	2	TAPPO 2° ATTIVAZIONE	BOUCHON	VERSCHLUSS	CAP	TAPON
31	498084	5	VITE TCEI M8X90 UNI 5931 8.8	VIS	SCHRAUBE	SCREW	TORNILLO
32	300372	3	FERMO	ARRET	SPERRUNG	RETAINER	TOPE
33	191090	13	DADO M8 UNI 7473	ECROU	MUTTER	NUT	TUERCA
34	466730	1	SUPPORTO	SUPPORT	TRAEGER	SUPPORT	SOPORTE
35	497131	5	VITE TCEI M8X20 UNI 5931 8.8	VIS	SCHRAUBE	SCREW	TORNILLO
36	497135	3	VITE TCEI M8X40 UNI 5931 8.8	VIS	SCHRAUBE	SCREW	TORNILLO
37	373679	1	PATTINO	PATIN	GLEIPLATTE	SLIDING BLOCK	PATIN
38	300373	2	FERMO	ARRET	SPERRUNG	RETAINER	TOPE
39	497287	5	VITE STEI M6X10 UNI 5927	VIS	SCHRAUBE	SCREW	TORNILLO
40	466725	1	SUPPORTO	SUPPORT	TRAEGER	SUPPORT	SOPORTE
41	497499	2	VITE TSPEI M8X25 UNI 5933 10.9	VIS	SCHRAUBE	SCREW	TORNILLO
42	497125	6	VITE TCEI M6X50 UNI 5931 8.8	VIS	SCHRAUBE	SCREW	TORNILLO
43	417026	4	RONDELLA SCHNORR S10 DACROMET	RONDELLE	SCHEIBE	WASHER	ARANDELA
44	497146	4	VITE TCEI M10X30 UNI 5931 8.8	VIS	SCHRAUBE	SCREW	TORNILLO
45	262027	4	SPESSORE	CALE D'EPAISSEUR	BEILAGE	SHIM	ESPESOR
46	466727	1	SUPPORTO (per versione 023)	SUPPORT	TRAEGER	SUPPORT	SOPORTE
46	466728	1	SUPPORTO (per versione 024)	SUPPORT	TRAEGER	SUPPORT	SOPORTE
47	429069	1	RULLO (per versione 024)	GALET	ROLLE	ROLLER	RODILLO
48	380278	1	PERNO (per versione 024)	AXE	BOLZEN	PIN	BULON
49	455213	2	SPINA 5X20 UNI 6873 (per versione 024)	GOUPILLE	STIFT	PIN	PASADOR

COMPL. COMANDO 1°-2° ATTIVAZIONE CON RACCOGLITUBO

** Complètement commande 1ère - 2ème activation avec serre-tubes*
** Vervollständigung Steuerung 1. - 2. Aktivierung mit Schlauchaufnahme*
** 1st - 2nd activation control with pipe holder*
** Completar mando 1ª - 2ª activación con recogetubo*

TAV. SV.05.01 2/2

matr. G.A23.0001

PM 12523-24
PM 12523-24 S
PM 13523-24 SP

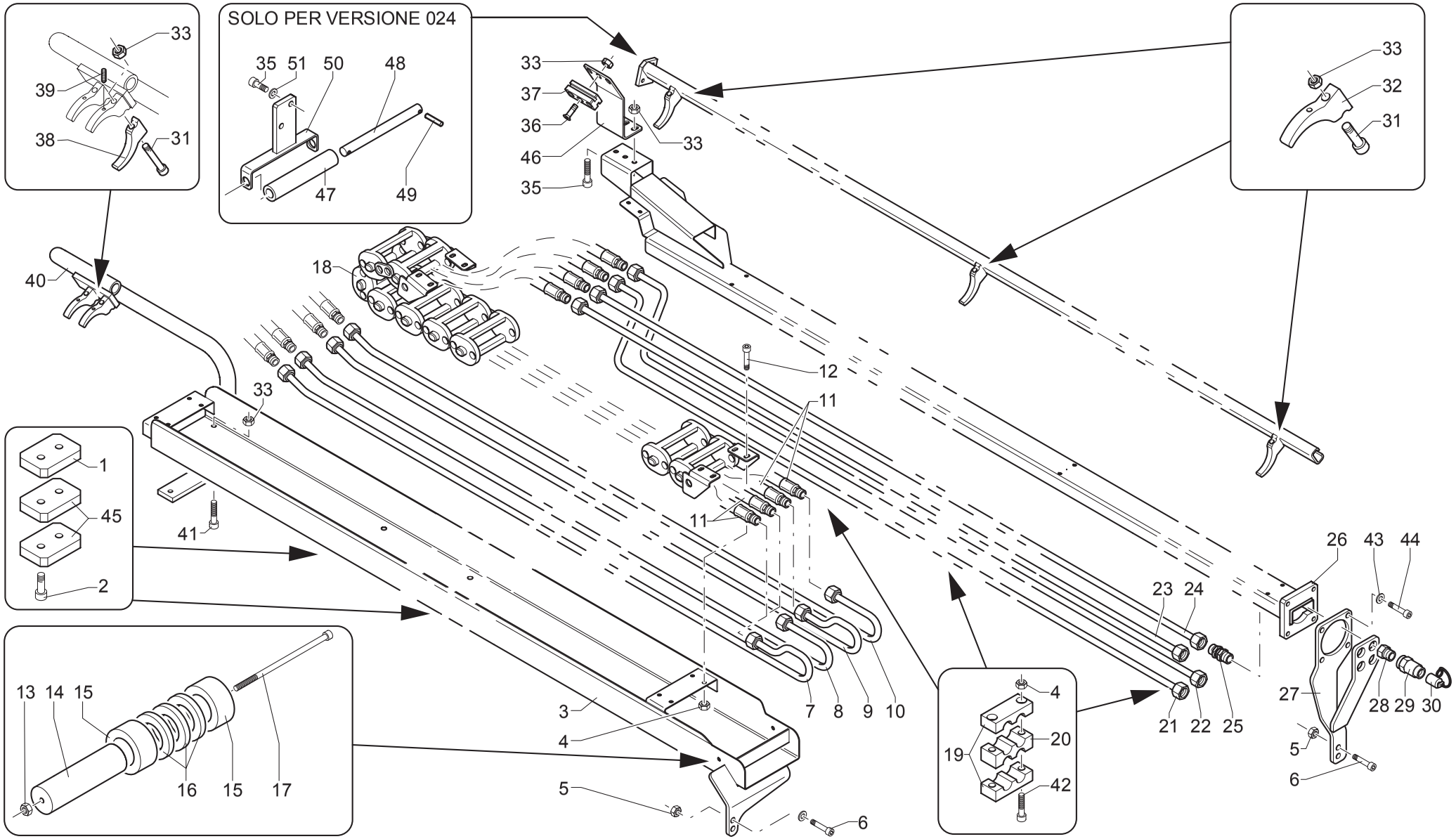

UNISTUDIO - Moder

POS.	N°CODICE	Q	DESCRIZIONE	DESIGNATION	BENENNUNG	DESCRIPTION	DENOMINACIONES
50	466726	1	SUPPORTO (per versione 024)	SUPPORT	TRAEGER	SUPPORT	SOPORTE
51	417025	2	ROND. SCHNORR S8 ZN (per versione 024)	RONDELLE	SCHEIBE	WASHER	ARANDELA

COMPL. 1°-2° ATTIVAZIONE CON AVVOLGITUBO

** Complètement 1ère - 2ème activation avec enrouleur*
** 1st - 2nd activation with hose reel, sequel*
** Vervollständigung 1. - 2. Aktivierung mit Schlauchwickler*
** Completar 1ª - 2ª activación con enrollador*

TAV. SV.06.01

matr. G.A23.0001

PM 12,5
PM 12,5 S
PM 13,5 SP

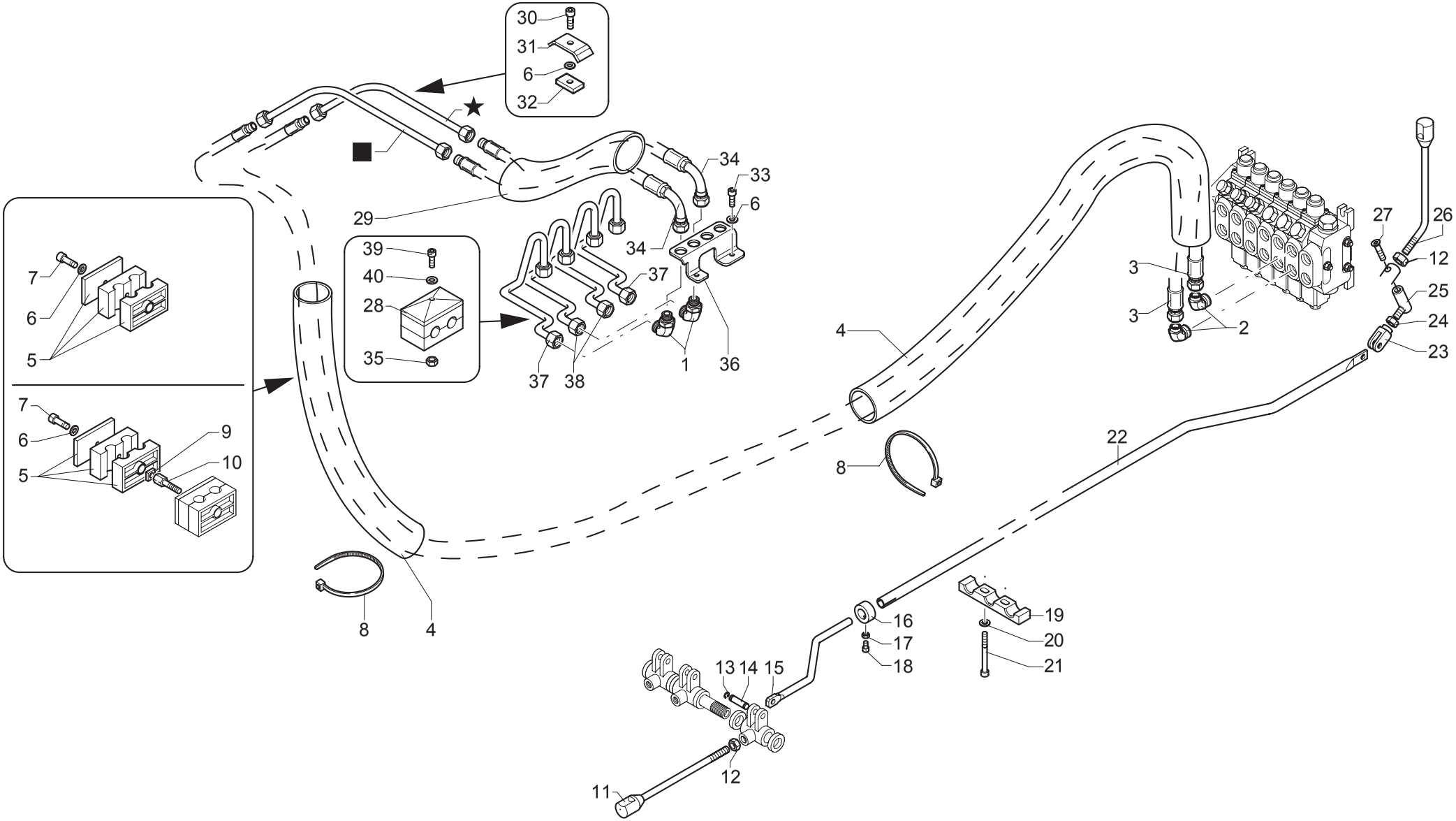

UNISTUDIO - Moder

POS.	N°CODICE	Q	DESCRIZIONE	DESIGNATION	BENENNUNG	DESCRIPTION	DENOMINACIONES
1	409481	2	RACCORDO	RACCORD	FITTING	FITTING	RACOR
2	409478	2	RACCORDO	RACCORD	FITTING	FITTING	RACOR
3	486415	2	TUBO IN GOMMA	TUYAU FLEX.	SCHLAUCH	HOSE	LATIGUILLO
4	276061	2	GUAINA	GAINE	MANTEL	SHEATH	MANGERA
5	353079	2	MORSETTO	ARRETOIR	KLEMME	FASTENING UNIT	CONEXION
6	417025	7	RONDELLA SCHNORR S8 ZN	RONDELLE	SCHEIBE	WASHER	ARANDELA
7	497134	2	VITE TCEI M8X35 UNI 5931 8.8	VIS	SCHRAUBE	SCREW	TORNILLO
8	207025	6	FASCETTA	COLLIER	HALTEBAND	CLAMP	ABRAZADERA
9	417210	1	RONDELLA	RONDELLE	SCHEIBE	WASHER	ARANDELA
10	498116	1	VITE	VIS	SCHRAUBE	SCREW	TORNILLO
11	120051	1	LEVA	LEVIER	HEBEL	LEVER	PALANCA
12	191036	2	DADO M10 UNI 5588	ECROU	MUTTER	NUT	TUERCA
13	109159	2	ANELLO 6 UNI 7434	JOINT D'ARRET	SPRENGRING	SPRING RING	SEEGER
14	379322	1	PERNO	AXE	BOLZEN	PIN	BULON
15	283018	1	TIRANTE	TIRANT	ZUGSTANGE	TIEROD	BARILLA
16	112167	1	BOCCOLA	DOUILLE	BUCHSE	BUSHING	CASQUILLO
17	191062	1	DADO M6 UNI 5589	ECROU	MUTTER	NUT	TUERCA
18	497118	1	VITE TCEI M6X16 UNI 5931 8.8	VIS	SCHRAUBE	SCREW	TORNILLO
19	353068	1	MORSETTO	ARRETOIR	KLEMME	FASTENING UNIT	CONEXION
20	417004	2	ROSETTA 8,4X17 UNI 6592	RONDELLE	SCHEIBE	WASHER	ARANDELA
21	497141	2	VITE TCEI M8X80 UNI 5931 8.8	VIS	SCHRAUBE	SCREW	TORNILLO
22	481263	1	TIRANTE	TIRANT	ZUGSTANGE	TIEROD	BARILLA
23	220018	1	FORCELLA	FOURCHE	GABEL	YOKE	HORQUILLA
24	191035	1	DADO M8 UNI 5588	ECROU	MUTTER	NUT	TUERCA
25	379727	1	PERNO	AXE	BOLZEN	PIN	BULON
26	120746	1	LEVA	LEVIER	HEBEL	LEVER	PALANCA

COMPL. 1°-2° ATTIVAZIONE CON AVVOLGITUBO

** Complètement 1ère - 2ème activation avec enrouleur*
** 1st - 2nd activation with hose reel, sequel*
** Vervollständigung 1. - 2. Aktivierung mit Schlauchwickler*
** Completar 1ª - 2ª activación con enrollador*

TAV. SV.06.01

matr. G.A23.0001

PM 12,5
PM 12,5 S
PM 13,5 SP

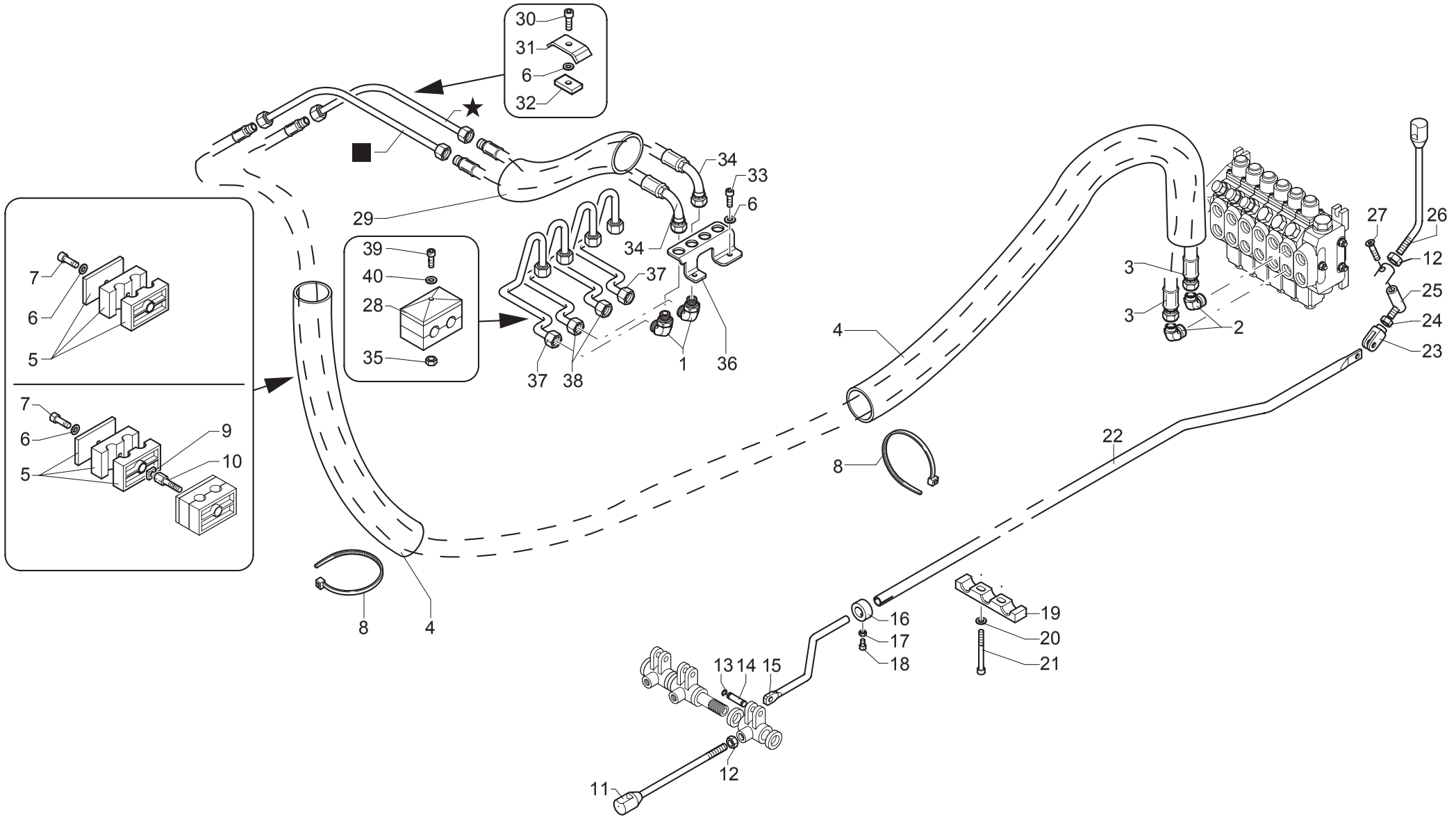

UNISTUDIO - Moder

POS.	N°CODICE	Q	DESCRIZIONE	DESIGNATION	BENENNUNG	DESCRIPTION	DENOMINACIONES
27	498099	1	VITE TSPEI M8X30 UNI 5933 10.9	VIS	SCHRAUBE	SCREW	TORNILLO
28	353076	1	MORSETTO	ARRETOIR	KLEMME	FASTENING UNIT	CONEXION
29	276037	1	GUAINA	GAINE	MANTEL	SHEATH	MANGERA
30	497130	3	VITE TCEI M8X16 UNI 5931 8.8	VIS	SCHRAUBE	SCREW	TORNILLO
31	353099	3	MORSETTO	ARRETOIR	KLEMME	FASTENING UNIT	CONEXION
32	262170	3	SPESSORE	CALE D'EPAISSEUR	BEILAGE	SHIM	ESPESOR
33	497209	2	VITE TCEI M8X12 UNI 5931 8.8	VIS	SCHRAUBE	SCREW	TORNILLO
34	486998	2	TUBO IN GOMMA	TUYAU FLEX.	SCHLAUCH	HOSE	LATIGUILLO
35	191162	1	DADO M6 UNI 7473	ECROU	MUTTER	NUT	TUERCA
36	466611	1	SUPPORTO	SUPPORT	TRAEGER	SUPPORT	SOPORTE
37	493544	1	TUBO IN FERRO 1° ATTIVAZIONE	TUYAU EN FER	EISEN-ROHR	IRON PIPE	TUBO DE HIERRO
37	493537	1	TUBO IN FERRO 2° ATTIVAZIONE	TUYAU EN FER	EISEN-ROHR	IRON PIPE	TUBO DE HIERRO
38	493543	1	TUBO IN FERRO 1° ATTIVAZIONE	TUYAU EN FER	EISEN-ROHR	IRON PIPE	TUBO DE HIERRO
38	493542	1	TUBO IN FERRO 2° ATTIVAZIONE	TUYAU EN FER	EISEN-ROHR	IRON PIPE	TUBO DE HIERRO
39	497125	1	VITE TCEI M6X50 UNI 5931 8.8	VIS	SCHRAUBE	SCREW	TORNILLO
40	417003	1	ROSETTA 6,4X12,5 UNI 6592	RONDELLE	SCHEIBE	WASHER	ARANDELA
★	493535	1	TUBO IN FERRO 1° ATTIVAZIONE	TUYAU EN FER	EISEN-ROHR	IRON PIPE	TUBO DE HIERRO
★	493518	1	TUBO IN FERRO 2° ATTIVAZIONE	TUYAU EN FER	EISEN-ROHR	IRON PIPE	TUBO DE HIERRO
■	493535	1	TUBO IN FERRO 1° ATTIVAZIONE	TUYAU EN FER	EISEN-ROHR	IRON PIPE	TUBO DE HIERRO
■	493517	1	TUBO IN FERRO 2° ATTIVAZIONE	TUYAU EN FER	EISEN-ROHR	IRON PIPE	TUBO DE HIERRO

COMPL. 1°-2° ATTIVAZIONE CON AVVOLGITUBO

** Complètement 1ère - 2ème activation avec enrouleur*
** 1st - 2nd activation with hose reel, sequel*
** Vervollständigung 1. - 2. Aktivierung mit Schlauchwickler*
** Completar 1ª - 2ª activación con enrollador*

TAV. SV.06.02

matr. G.A23.0001

PM 12,5 LC
PM 12,5 S LC
PM 13,5 SP LC

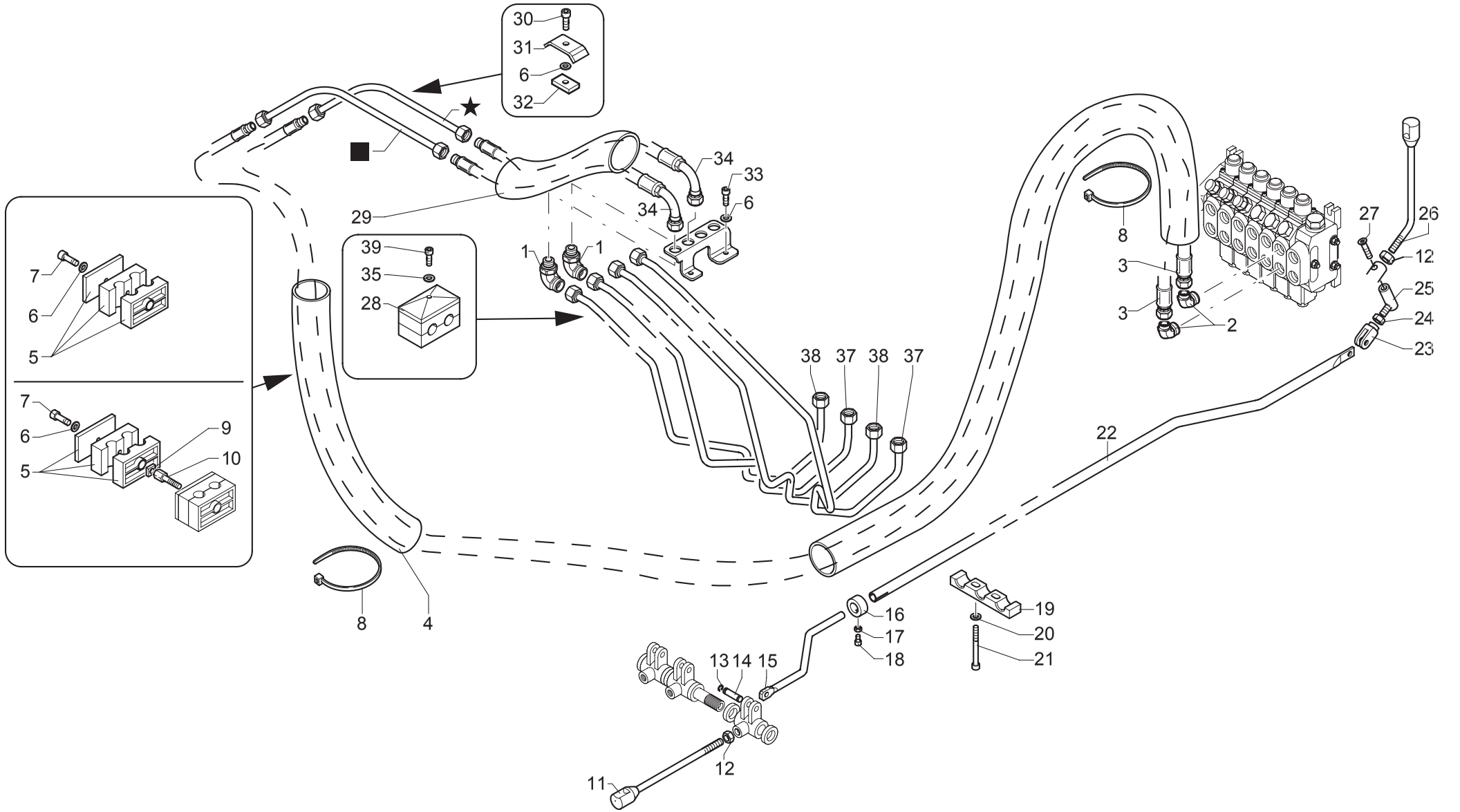

UNISTUDIO - Moder

POS.	N°CODICE	Q	DESCRIZIONE	DESIGNATION	BENENNUNG	DESCRIPTION	DENOMINACIONES
1	409481	2	RACCORDO	RACCORD	FITTING	FITTING	RACOR
2	409478	2	RACCORDO	RACCORD	FITTING	FITTING	RACOR
3	486415	2	TUBO IN GOMMA	TUYAU FLEX.	SCHLAUCH	HOSE	LATIGUILLO
4	276061	2	GUAINA	GAINE	MANTEL	SHEATH	MANGERA
5	353079	2	MORSETTO	ARRETOIR	KLEMME	FASTENING UNIT	CONEXION
6	417025	7	RONDELLA SCHNORR S8 ZN	RONDELLE	SCHEIBE	WASHER	ARANDELA
7	497134	2	VITE TCEI M8X35 UNI 5931 8.8	VIS	SCHRAUBE	SCREW	TORNILLO
8	207025	6	FASCETTA	COLLIER	HALTEBAND	CLAMP	ABRAZADERA
9	417210	1	RONDELLA	RONDELLE	SCHEIBE	WASHER	ARANDELA
10	498116	1	VITE	VIS	SCHRAUBE	SCREW	TORNILLO
11	120051	1	LEVA	LEVIER	HEBEL	LEVER	PALANCA
12	191036	2	DADO M10 UNI 5588	ECROU	MUTTER	NUT	TUERCA
13	109159	2	ANELLO 6 UNI 7434	JOINT D'ARRET	SPRENGRING	SPRING RING	SEEGER
14	379322	1	PERNO	AXE	BOLZEN	PIN	BULON
15	283018	1	TIRANTE	TIRANT	ZUGSTANGE	TIEROD	BARILLA
16	112167	1	BOCCOLA	DOUILLE	BUCHSE	BUSHING	CASQUILLO
17	191062	1	DADO M6 UNI 5589	ECROU	MUTTER	NUT	TUERCA
18	497118	1	VITE TCEI M6X16 UNI 5931 8.8	VIS	SCHRAUBE	SCREW	TORNILLO
19	353068	1	MORSETTO	ARRETOIR	KLEMME	FASTENING UNIT	CONEXION
20	417004	2	ROSETTA 8,4X17 UNI 6592	RONDELLE	SCHEIBE	WASHER	ARANDELA
21	497141	2	VITE TCEI M8X80 UNI 5931 8.8	VIS	SCHRAUBE	SCREW	TORNILLO
22	481263	1	TIRANTE	TIRANT	ZUGSTANGE	TIEROD	BARILLA
23	220018	1	FORCELLA	FOURCHE	GABEL	YOKE	HORQUILLA
24	191035	1	DADO M8 UNI 5588	ECROU	MUTTER	NUT	TUERCA
25	379727	1	PERNO	AXE	BOLZEN	PIN	BULON
26	120746	1	LEVA	LEVIER	HEBEL	LEVER	PALANCA

COMPL. 1°-2° ATTIVAZIONE CON AVVOLGITUBO

** Complètement 1ère - 2ème activation avec enrouleur*
** 1st - 2nd activation with hose reel, sequel*
** Vervollständigung 1. - 2. Aktivierung mit Schlauchwickler*
** Completar 1ª - 2ª activación con enrollador*

TAV. SV.06.02

matr. G.A23.0001

PM 12,5 LC
PM 12,5 S LC
PM 13,5 SP LC

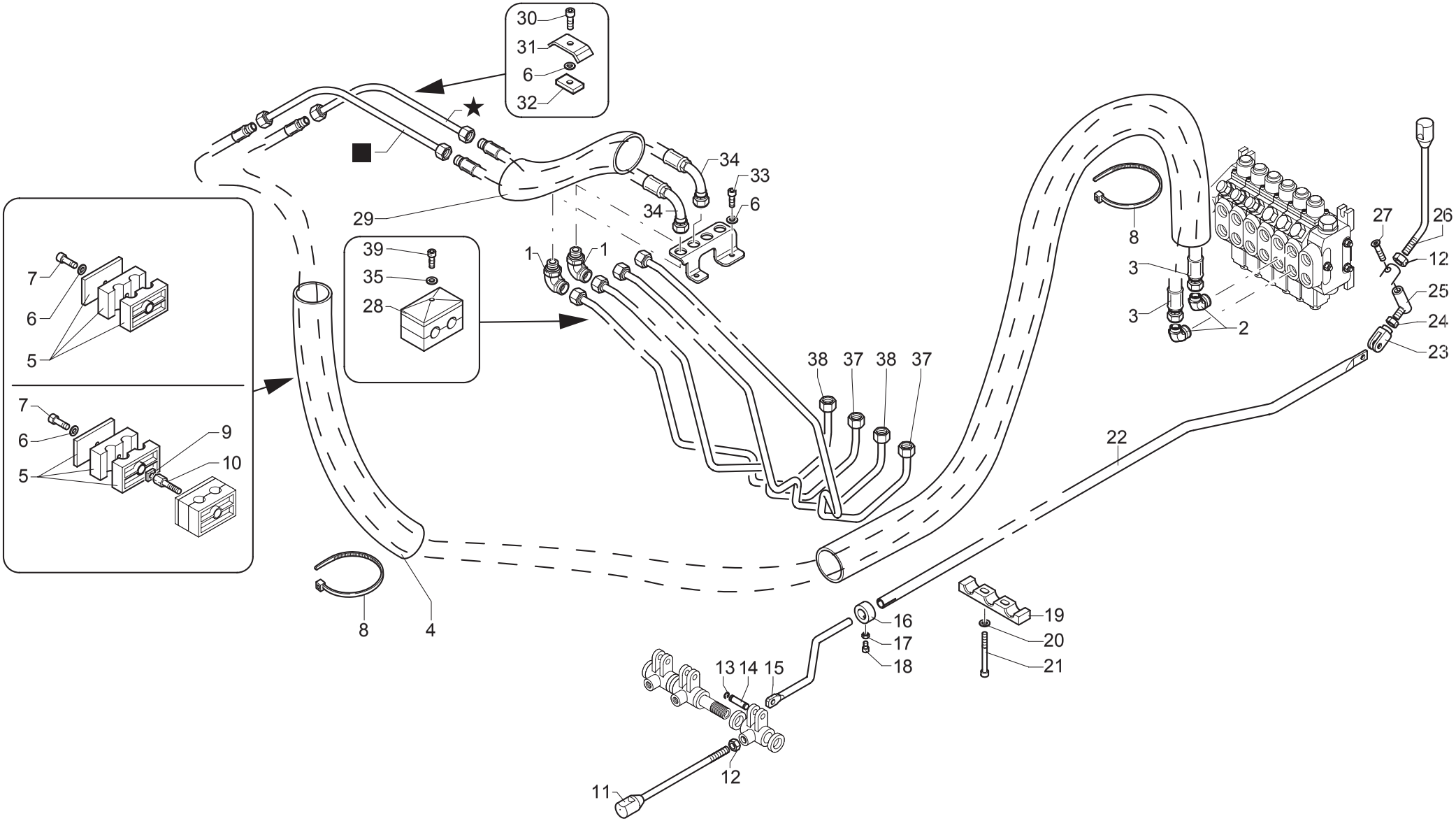

UNISTUDIO - Moder

POS.	N°CODICE	Q	DESCRIZIONE	DESIGNATION	BENENNUNG	DESCRIPTION	DENOMINACIONES
27	498099	1	VITE TSPEI M8X30 UNI 5933 10.9	VIS	SCHRAUBE	SCREW	TORNILLO
28	353076	1	MORSETTO	ARRETOIR	KLEMME	FASTENING UNIT	CONEXION
29	276037	3	GUAINA	GAINE	MANTEL	SHEATH	MANGERA
30	497130	3	VITE TCEI M8X16 UNI 5931 8.8	VIS	SCHRAUBE	SCREW	TORNILLO
31	353099	3	MORSETTO	ARRETOIR	KLEMME	FASTENING UNIT	CONEXION
32	262170	3	SPESSORE	CALE D'EPAISSEUR	BEILAGE	SHIM	ESPESOR
33	497209	2	VITE TCEI M8X12 UNI 5931 8.8	VIS	SCHRAUBE	SCREW	TORNILLO
34	486998	2	TUBO IN GOMMA	TUYAU FLEX.	SCHLAUCH	HOSE	LATIGUILLO
35	417003	1	ROSETTA 6,4X12,5 UNI 6592	RONDELLE	SCHEIBE	WASHER	ARANDELA
36	466611	1	SUPPORTO	SUPPORT	TRAEGER	SUPPORT	SOPORTE
37	493598	1	TUBO IN FERRO 1° ATTIVAZIONE	TUYAU EN FER	EISEN-ROHR	IRON PIPE	TUBO DE HIERRO
37	493596	1	TUBO IN FERRO 2° ATTIVAZIONE	TUYAU EN FER	EISEN-ROHR	IRON PIPE	TUBO DE HIERRO
38	493599	1	TUBO IN FERRO 1° ATTIVAZIONE	TUYAU EN FER	EISEN-ROHR	IRON PIPE	TUBO DE HIERRO
38	493597	1	TUBO IN FERRO 2° ATTIVAZIONE	TUYAU EN FER	EISEN-ROHR	IRON PIPE	TUBO DE HIERRO
39	497125	1	VITE TCEI M6X50 UNI 5931 8.8	VIS	SCHRAUBE	SCREW	TORNILLO
★	493535	1	TUBO IN FERRO 1° ATTIVAZIONE	TUYAU EN FER	EISEN-ROHR	IRON PIPE	TUBO DE HIERRO
★	493518	1	TUBO IN FERRO 2° ATTIVAZIONE	TUYAU EN FER	EISEN-ROHR	IRON PIPE	TUBO DE HIERRO
■	493535	1	TUBO IN FERRO 1° ATTIVAZIONE	TUYAU EN FER	EISEN-ROHR	IRON PIPE	TUBO DE HIERRO
■	493517	1	TUBO IN FERRO 2° ATTIVAZIONE	TUYAU EN FER	EISEN-ROHR	IRON PIPE	TUBO DE HIERRO

COLLEGAMENTO IMPIANTO 1° ATTIVAZIONE CON AVVOLGITUBO

** Connection installation 1ère activation avec enrouleur*
** 1st activation with hose reel system connection*
** 1. Aktivierung mit Schlauchwickler Anlage Verbindung*
** Conexion instalación 1ª activación con enrollador*

TAV. SV.07.01

matr. G.A23.0001

PM 12,5
PM 12,5 S
PM 13,5 SP

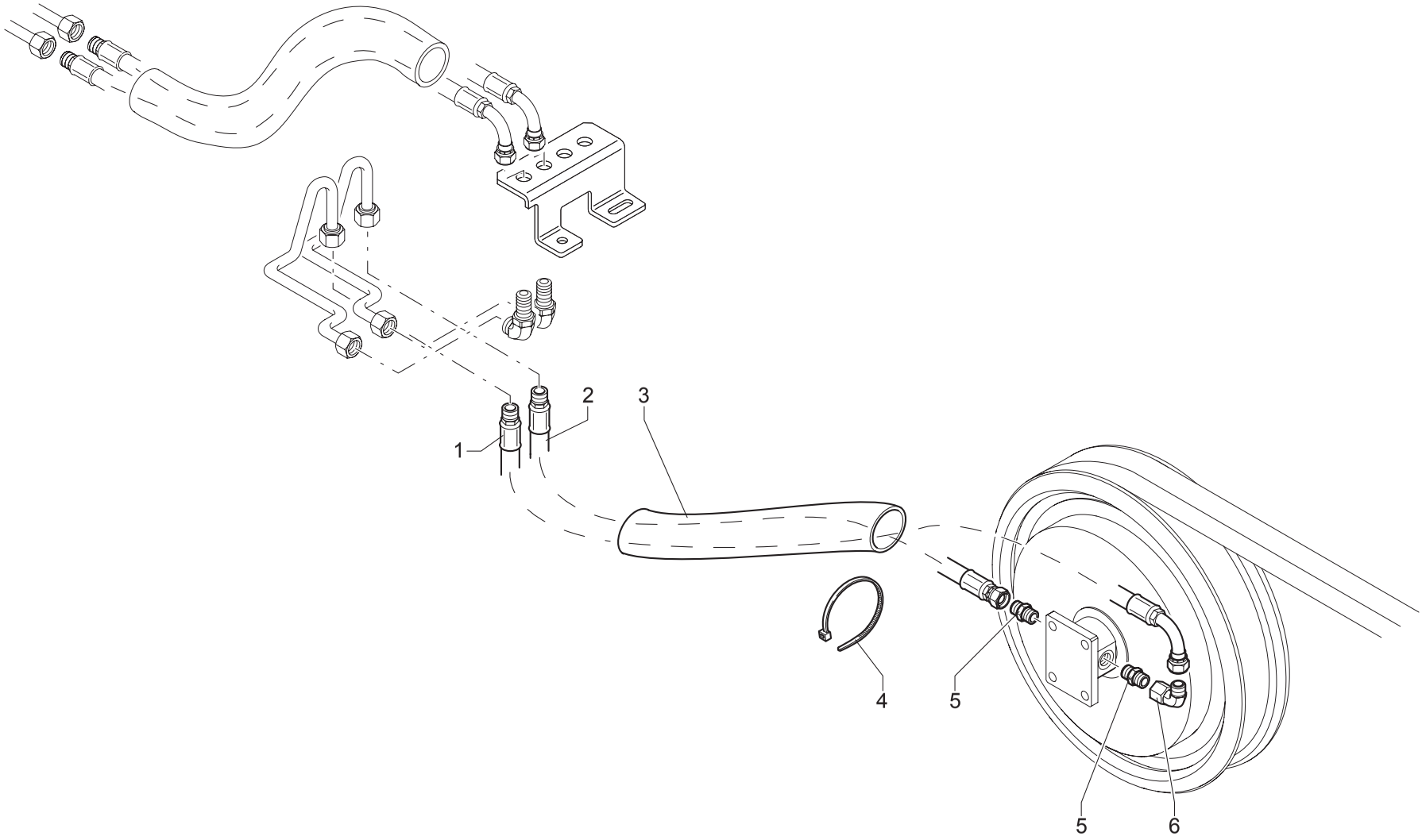

UNISTUDIO - Moder

POS.	N°CODICE	Q	DESCRIZIONE	DESIGNATION	BENENNUNG	DESCRIPTION	DENOMINACIONES
1	482072	1	TUBO IN GOMMA 1° ATTIVAZIONE	TUYAU FLEX.	SCHLAUCH	HOSE	LATIGUILLO
2	482074	1	TUBO IN GOMMA 1° ATTIVAZIONE	TUYAU FLEX.	SCHLAUCH	HOSE	LATIGUILLO
3	276061	1	GUAINA 1° ATTIVAZIONE	GAINE	MANTEL	SHEATH	MANGERA
4	207064	2	FASCETTA	COLLIER	HALTEBAND	CLAMP	ABRAZADERA
5	409253	2	RACCORDO	RACCORD	FITTING	FITTING	RACOR
6	409394	1	RACCORDO	RACCORD	FITTING	FITTING	RACOR

COLLEGAMENTO IMPIANTO 1° ATTIVAZIONE CON AVVOLGITUBO

** Connection installation 1ère activation avec enrouleur*
** 1st activation with hose reel system connection*
** 1. Aktivierung mit Schlauchwickler Anlage Verbindung*
** Conexion instalación 1ª activación con enrollador*

TAV. SV.07.02

matr. G.A23.0001

PM 12,5 LC
PM 12,5 S LC
PM 13,5 SP LC

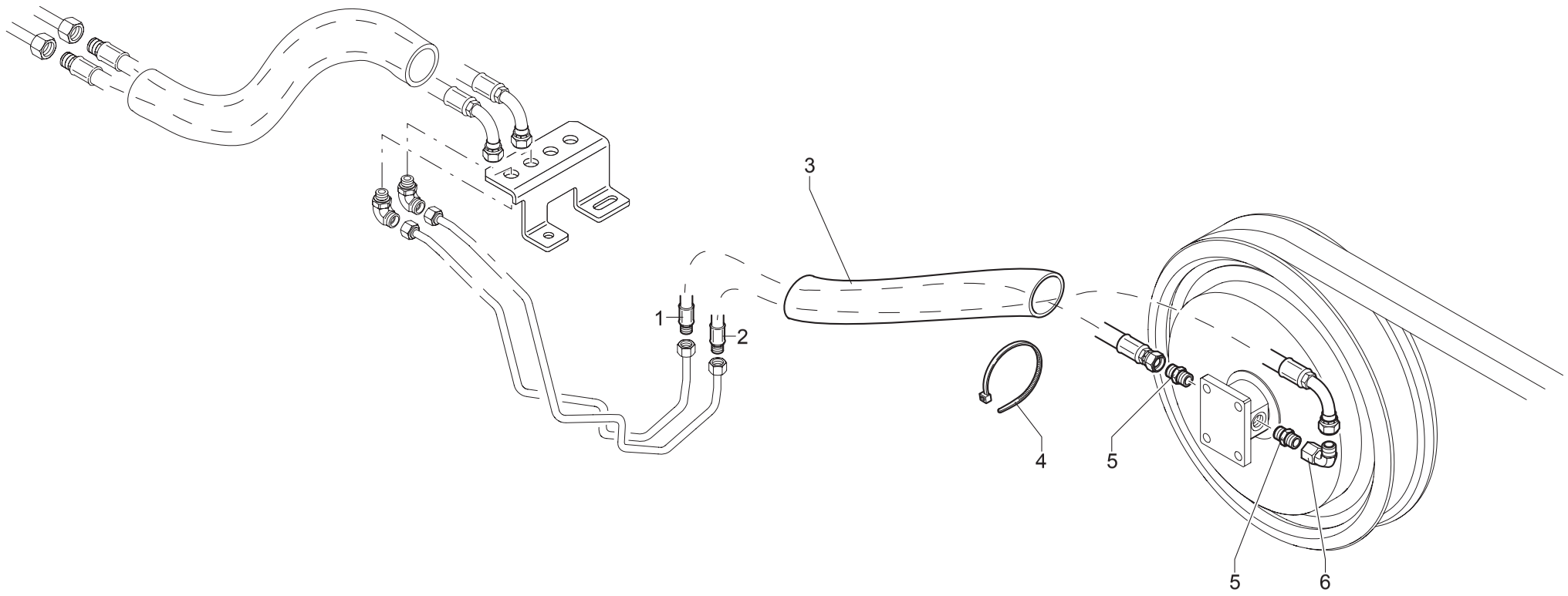

POS.	N°CODICE	Q	DESCRIZIONE	DESIGNATION	BENENNUNG	DESCRIPTION	DENOMINACIONES
1	482089	1	TUBO IN GOMMA 1° ATT.	TUYAU FLEX.	SCHLAUCH	HOSE	LATIGUILLO
2	482090	1	TUBO IN GOMMA 1° ATT.	TUYAU FLEX.	SCHLAUCH	HOSE	LATIGUILLO
3	276051	1	GUAINA	GAINE	MANTEL	SHEATH	MANGERA
4	207064	2	FASCETTA	COLLIER	HALTEBAND	CLAMP	ABRAZADERA
5	409253	2	RACCORDO	RACCORD	FITTING	FITTING	RACOR
6	409394	1	RACCORDO	RACCORD	FITTING	FITTING	RACOR

COLLEGAMENTO IMPIANTO 2° ATTIVAZIONE CON AVVOLGITUBO

** Connection installation 2ème activation avec enrouleur*
** 2ndt activation with hose reel system connection*
** 2. Aktivierung mit Schlauchwickler Anlage Verbindung*
** Conexion instalación 2ª activación con enrollador*

TAV. SV.08.01

matr. G.A23.0001

PM 12,5
PM 12,5 S
PM 13,5 SP

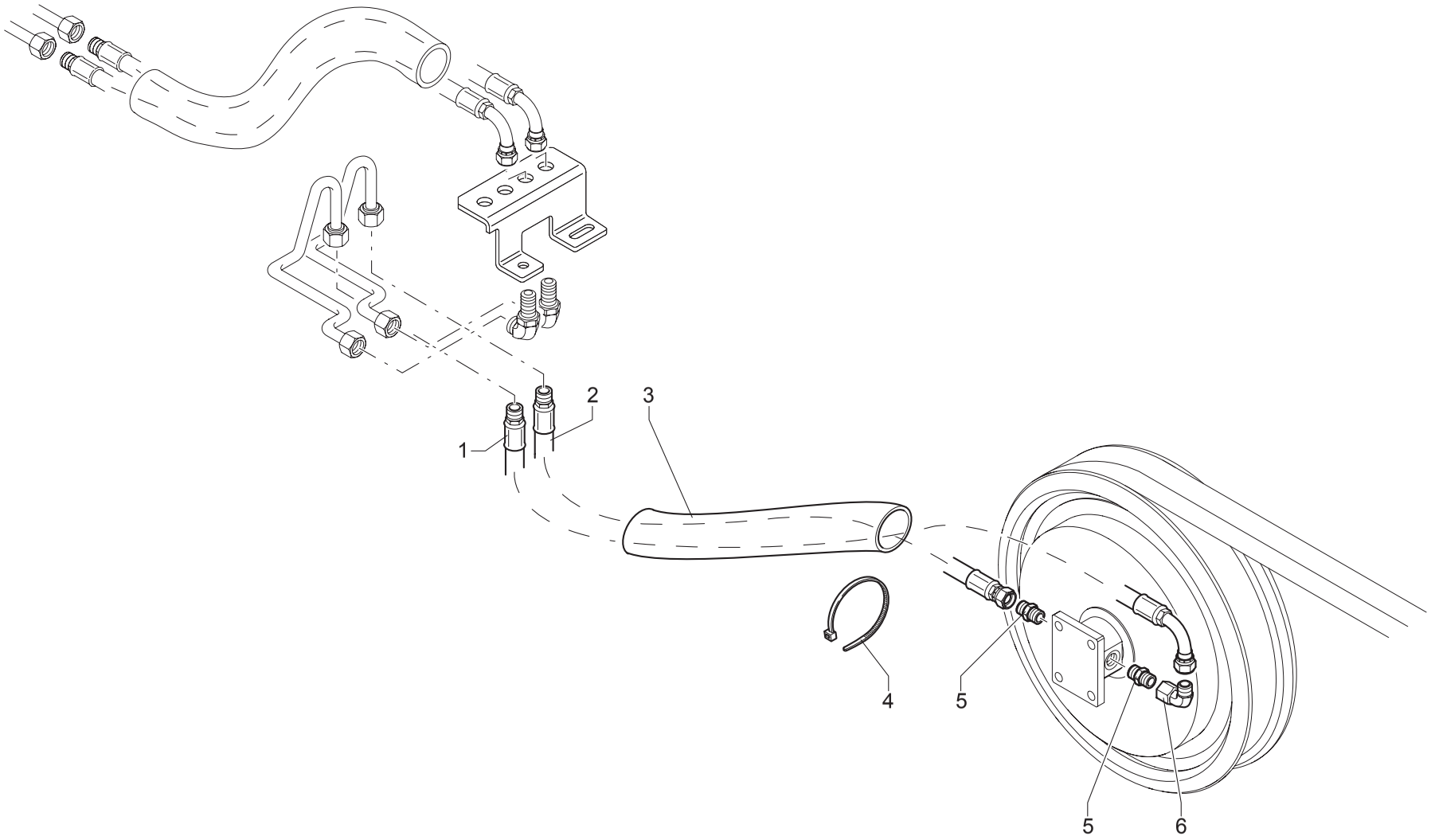

UNISTUDIO - Moder

POS.	N°CODICE	Q	DESCRIZIONE	DESIGNATION	BENENNUNG	DESCRIPTION	DENOMINACIONES
1	482069	1	TUBO IN GOMMA 2° ATTIVAZIONE	TUYAU FLEX.	SCHLAUCH	HOSE	LATIGUILLO
2	482075	1	TUBO IN GOMMA 2° ATTIVAZIONE	TUYAU FLEX.	SCHLAUCH	HOSE	LATIGUILLO
3	276084	1	GUAINA 2° ATTIVAZIONE	GAINE	MANTEL	SHEATH	MANGERA
4	207064	2	FASCETTA	COLLIER	HALTEBAND	CLAMP	ABRAZADERA
5	409253	2	RACCORDO	RACCORD	FITTING	FITTING	RACOR
6	409394	1	RACCORDO	RACCORD	FITTING	FITTING	RACOR

COLLEGAMENTO IMPIANTO 2° ATTIVAZIONE CON AVVOLGITUBO

** Connection installation 2ème activation avec enrouleur*
** 2ndt activation with hose reel system connection*
** 2. Aktivierung mit Schlauchwickler Anlage Verbindung*
** Conexion instalación 2ª activación con enrollador*

TAV. SV.08.02

matr. G.A23.0001

PM 12,5 LC
PM 12,5 S LC
PM 13,5 SP LC

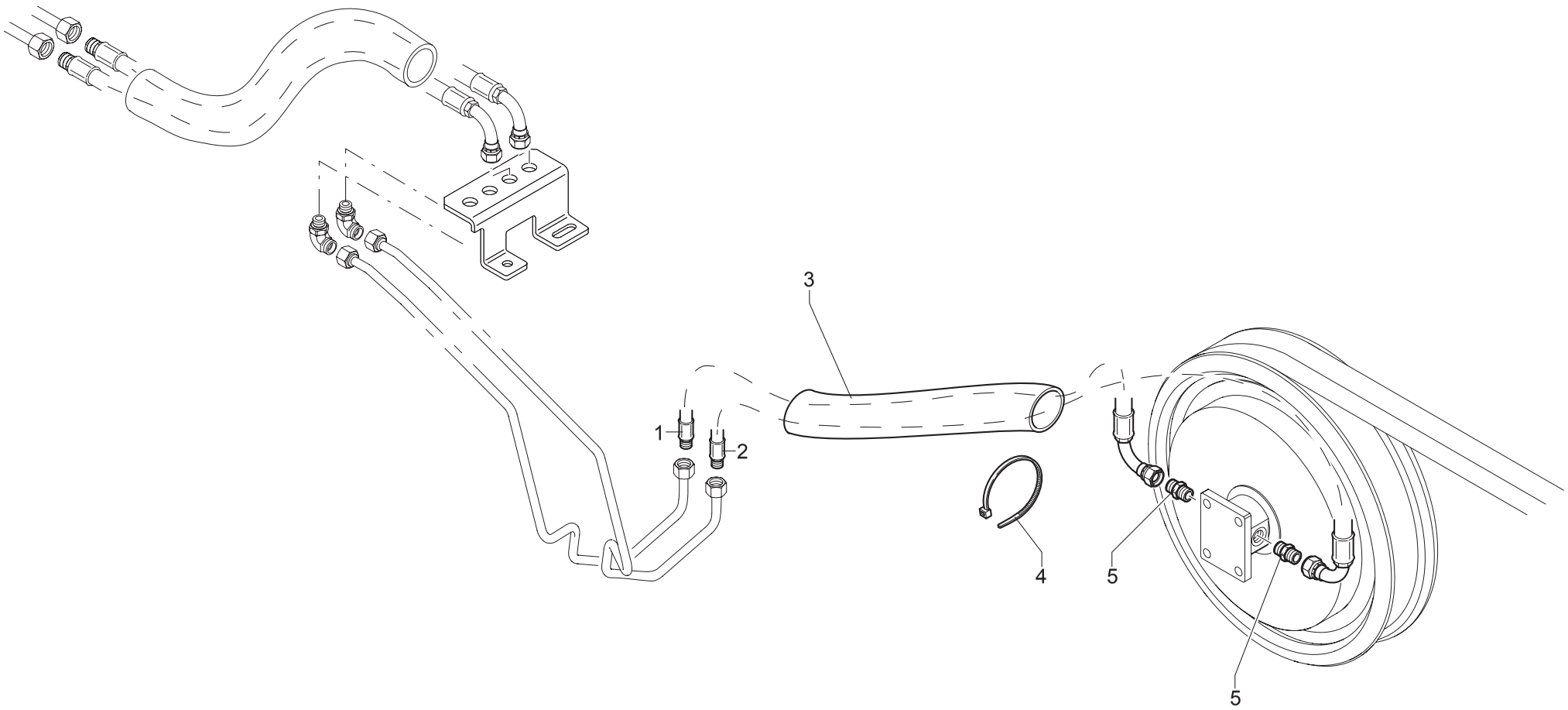

UNISTUDIO - Moder

POS.	N°CODICE	Q	DESCRIZIONE	DESIGNATION	BENENNUNG	DESCRIPTION	DENOMINACIONES
1	482092	1	TUBO IN GOMMA 2° ATTIVAZIONE	TUYAU FLEX.	SCHLAUCH	HOSE	LATIGUILLO
2	482091	1	TUBO IN GOMMA 2° ATTIVAZIONE	TUYAU FLEX.	SCHLAUCH	HOSE	LATIGUILLO
3	276100	1	GUAINA	GAINE	MANTEL	SHEATH	MANGERA
4	207064	2	FASCETTA	COLLIER	HALTEBAND	CLAMP	ABRAZADERA
5	409253	2	RACCORDO	RACCORD	FITTING	FITTING	RACOR

COMPL. COMANDO 1° ATTIVAZIONE (3/8") CON AVVOLGITUBO

** Complètement commande 1ère activation (3/8") avec enrouleur*
** Vervollständigung Steuerung 1. Aktivierung (3/8") mit Schlauchwickler*
** 1st activation (3/8") control with hose reel, sequel*
** Completar mando 1ª activación (3/8") con enrollador*

TAV. SV.09.01

matr. G.A23.0001

PM
12521-21LC
12521S-21S LC
13521 SP-21 SP LC

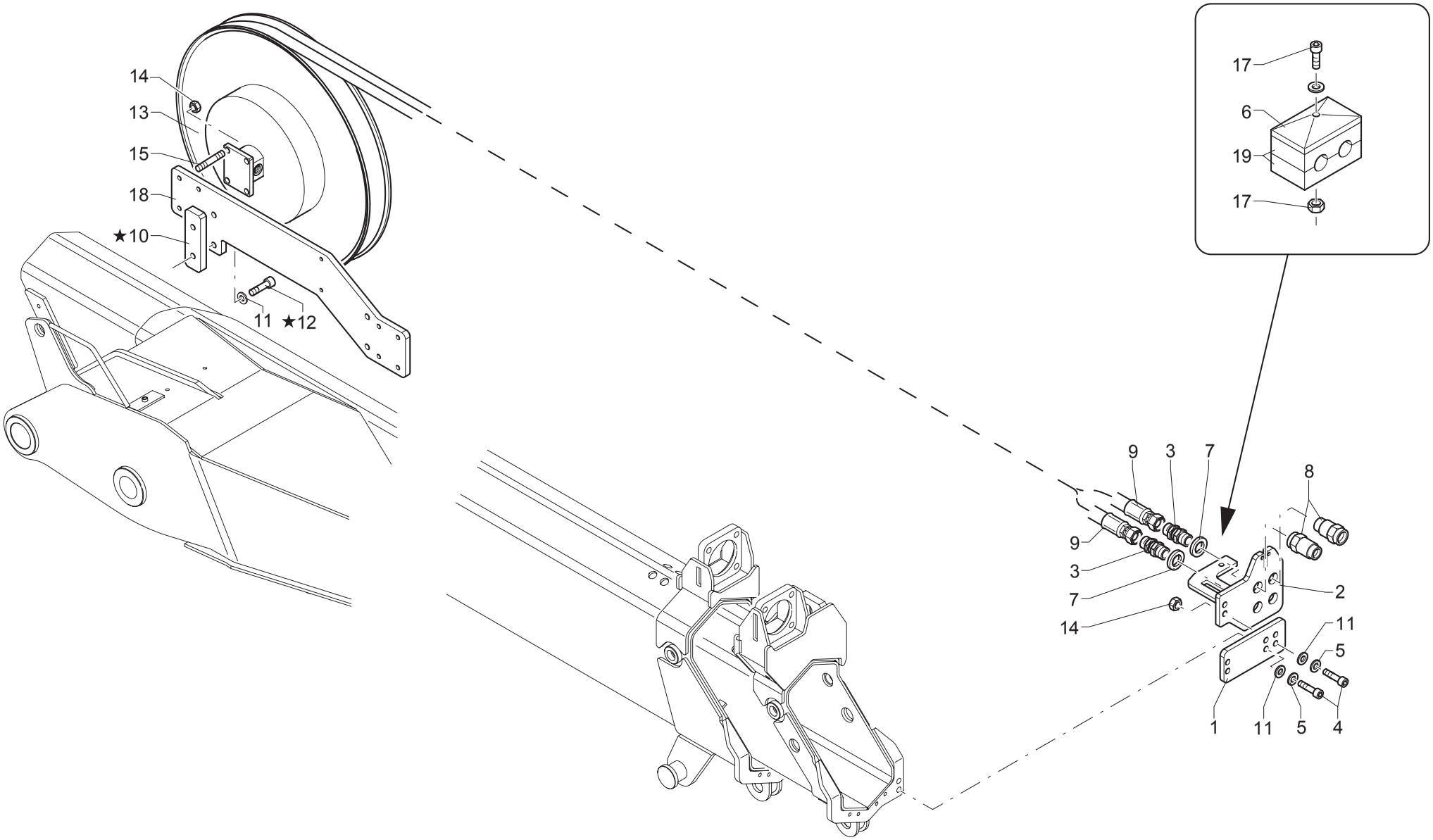

UNISTUDIO - Moder

POS.	N°CODICE	Q	DESCRIZIONE	DESIGNATION	BENENNUNG	DESCRIPTION	DENOMINACIONES
1	466718	1	SUPPORTO	SUPPORT	TRAEGER	SUPPORT	SOPORTE
2	466704	1	SUPPORTO	SUPPORT	TRAEGER	SUPPORT	SOPORTE
3	409735	2	RACCORDO	RACCORD	FITTING	FITTING	RACOR
4	497148	4	VITE TCEI M10X40 UNI 5931 8.8	VIS	SCHRAUBE	SCREW	TORNILLO
5	417005	4	ROSETTA 10,5X21 UNI 6592	RONDELLE	SCHEIBE	WASHER	ARANDELA
6	353118	1	PIASTRINA	PLAQUETTE	PLAETTCHEN	PLATE	CHAPETA
7	417092	2	RONDELLA DOWTY BONDED SEAL PP45-D	RONDELLE	SCHEIBE	WASHER	ARANDELA
8	124001	2	ATTACCO RAPIDO	ATTACHE RAPIDE	SCHNELLE VERBINDUNG	QUICK COUPLING	ENCHUFE RAPIDO
9	486092	1	TUBO IN GOMMA	TUYAU FLEX.	SCHLAUCH	HOSE	LATIGUILLO
10 ★	466731	2	SUPPORTO (versione STD)	SUPPORT	TRAEGER	SUPPORT	SOPORTE
11	417026	8	RONDELLA SCHNORR S10 DACROMET	RONDELLE	SCHEIBE	WASHER	ARANDELA
12 ★	497147	4	VITE TCEI M10X35 UNI 5931 8.8 (vers. STD)	VIS	SCHRAUBE	SCREW	TORNILLO
12 ★	497145	4	VITE TCEI M10X25 UNI 5931 8.8 (vers. LC)	VIS	SCHRAUBE	SCREW	TORNILLO
13	469023	1	AVVOLGITUBO	ENROULEUR	SCHLAUCHWICKLER	HOSE REEL	ENROLLADOR
14	191092	8	DADO M10 UNI 7473	ECROU	MUTTER	NUT	TUERCA
15	497353	4	VITE PRIGION.M10X25 UNI 5911-66-8G	VIS	SCHRAUBE	SCREW	TORNILLO
16	498071	1	VITE TCEI M8X100 UNI 5931 8.8	VIS	SCHRAUBE	SCREW	TORNILLO
17	191090	1	DADO M8 UNI 7473	ECROU	MUTTER	NUT	TUERCA
18	300114	1	SUPPORTO	SUPPORT	TRAEGER	SUPPORT	SOPORTE
19	466765	2	MORSETTO	ARRETOIR	KLEMME	FASTENING UNIT	CONEXION

COMPL. COMANDO 1° ATTIVAZIONE (3/8") CON AVVOLGITUBO

** Complètement commande 1ère activation (3/8") avec enrouleur*
** Vervollständigung Steuerung 1. Aktivierung (3/8") mit Schlauchwickler*
** 1st activation (3/8") control with hose reel, sequel*
** Completar mando 1ª activación (3/8") con enrollador*

TAV. SV.09.02

matr. G.A23.0001

PM
12522-22LC
12522S-22S LC
13522 SP-22 SP LC

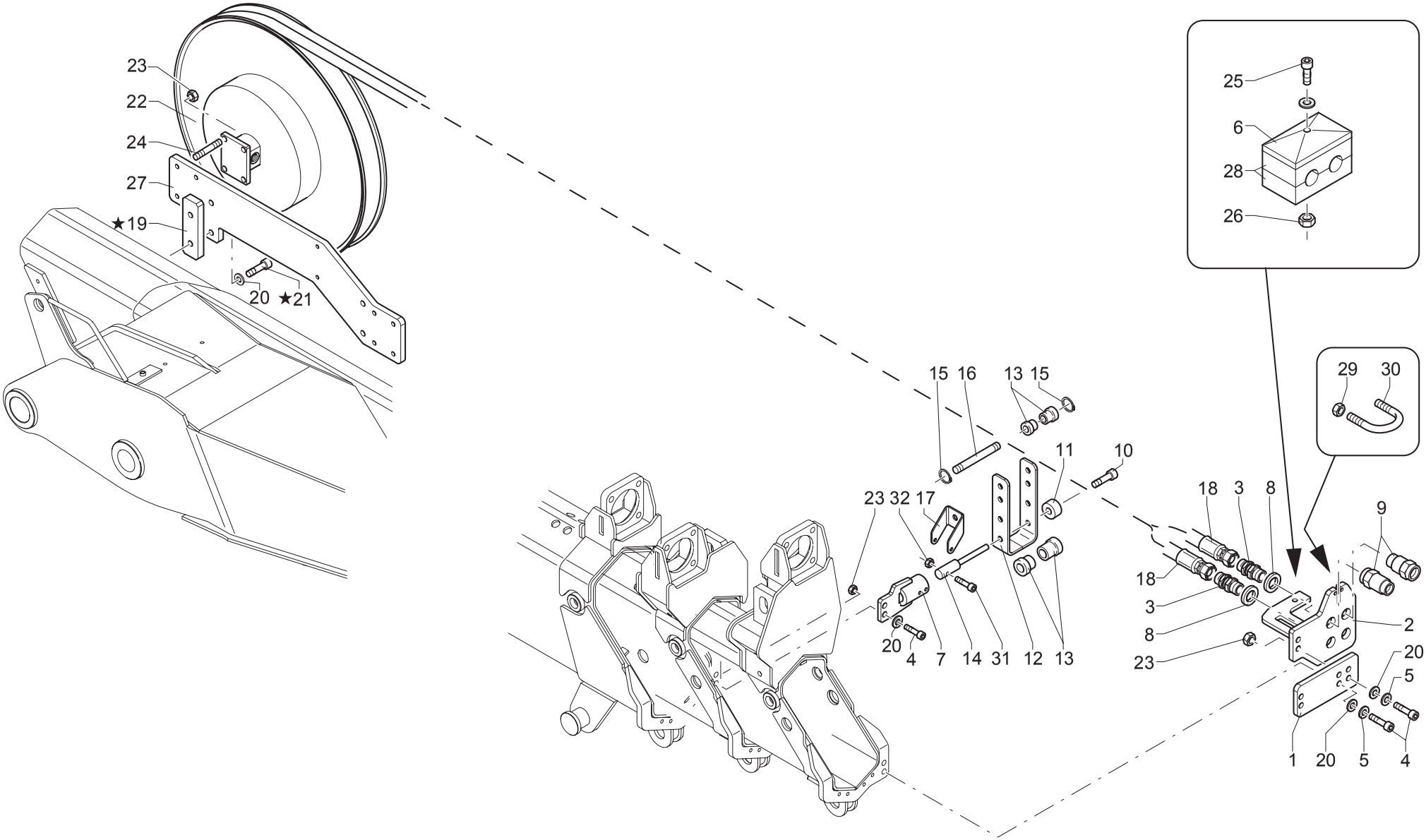

UNISTUDIO - Moder

POS.	N°CODICE	Q	DESCRIZIONE	DESIGNATION	BENENNUNG	DESCRIPTION	DENOMINACIONES
1	466718	1	SUPPORTO	SUPPORT	TRAEGER	SUPPORT	SOPORTE
2	466704	1	SUPPORTO	SUPPORT	TRAEGER	SUPPORT	SOPORTE
3	409735	2	RACCORDO	RACCORD	FITTING	FITTING	RACOR
4	497148	6	VITE TCEI M10X40 UNI 5931 8.8	VIS	SCHRAUBE	SCREW	TORNILLO
5	417005	4	ROSETTA 10,5X21 UNI 6592	RONDELLE	SCHEIBE	WASHER	ARANDELA
6	353118	1	PIASTRINA	PLAQUETTE	PLAETTCHEN	PLATE	CHAPETA
7	466700	1	SUPPORTO	SUPPORT	TRAEGER	SUPPORT	SOPORTE
8	417092	2	RONDELLA DOWTY BONDED SEAL PP45-D	RONDELLE	SCHEIBE	WASHER	ARANDELA
9	124001	2	ATTACCO RAPIDO	ATTACHE RAPIDE	SCHNELLE VERBINDUNG	QUICK COUPLING	ENCHUFE RAPIDO
10	498072	1	VITE TCEI M6X14 UNI 5931 8.8	VIS	SCHRAUBE	SCREW	TORNILLO
11	136518	1	DISTANZIALE	ENTRETOISE	DISTANZHULSE	SPACER	DISTANCIADOR
12	466460	1	SUPPORTO	SUPPORT	TRAEGER	SUPPORT	SOPORTE
13	429064	6	RULLO	GALET	ROLLE	ROLLER	RODILLO
14	380183	1	PERNO	AXE	BOLZEN	PIN	BULON
15	109001	6	ANELLO 10 UNI 7435	BAGUE	RING	RING	ARO
16	380157	3	PERNO	AXE	BOLZEN	PIN	BULON
17	208194	1	FERMO	ARRET	SPERRUNG	RETAINER	TOPE
18	486448	1	TUBO IN GOMMA	TUYAU FLEX.	SCHLAUCH	HOSE	LATIGUILLO
19 ★	466731	2	SUPPORTO (versione STD)	SUPPORT	TRAEGER	SUPPORT	SOPORTE
20	417026	10	RONDELLA SCHNORR S10 DACROMET	RONDELLE	SCHEIBE	WASHER	ARANDELA
21 ★	497147	4	VITE TCEI M10X35 UNI 5931 8.8 (vers. STD)	VIS	SCHRAUBE	SCREW	TORNILLO
21 ★	497145	4	VITE TCEI M10X25 UNI 5931 8.8 (vers. LC)	VIS	SCHRAUBE	SCREW	TORNILLO
22	469023	1	AVVOLGITUBO	ENROULEUR	SCHLAUCHWICKLER	HOSE REEL	ENROLLADOR
23	191092	10	DADO M10 UNI 7473	ECROU	MUTTER	NUT	TUERCA
24	497353	4	VITE PRIGION.M10X25 UNI 5911-66-8G	VIS	SCHRAUBE	SCREW	TORNILLO
25	498071	1	VITE TCEI M8X100 UNI 5931 8.8	VIS	SCHRAUBE	SCREW	TORNILLO

COMPL. COMANDO 1° ATTIVAZIONE (3/8") CON AVVOLGITUBO

** Complètement commande 1ère activation (3/8") avec enrouleur*
** Vervollständigung Steuerung 1. Aktivierung (3/8") mit Schlauchwickler*
** 1st activation (3/8") control with hose reel, sequel*
** Completar mando 1ª activación (3/8") con enrollador*

TAV. SV.09.02

matr. G.A23.0001

PM
12522-22LC
12522S-22S LC
13522 SP-22 SP LC

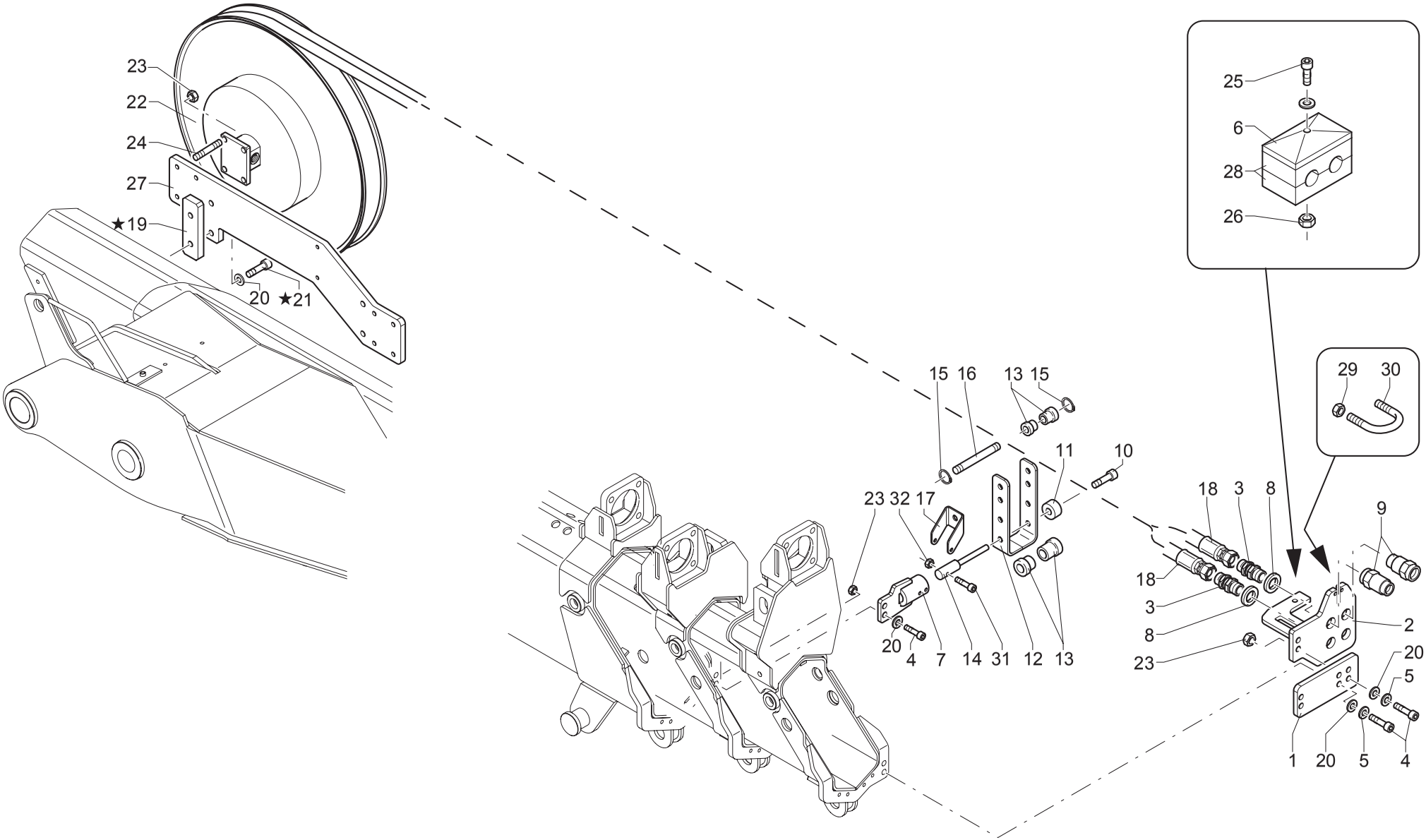

UNISTUDIO - Moder

POS.	N°CODICE	Q	DESCRIZIONE	DESIGNATION	BENENNUNG	DESCRIPTION	DENOMINACIONES
26	191090	1	DADO M8 UNI 7473	ECROU	MUTTER	NUT	TUERCA
27	300114	1	SUPPORTO	SUPPORT	TRAEGER	SUPPORT	SOPORTE
28	466765	2	MORSETTO	ARRETOIR	KLEMME	FASTENING UNIT	CONEXION
29	353117	1	FERMO	ARRET	SPERRUNG	RETAINER	TOPE
30	191125	2	DADO M6 UNI 7474	ECROU	MUTTER	NUT	TUERCA
31	497391	1	VITE	VIS	SCHRAUBE	SCREW	TORNILLO
32	191017	1	DADO M5 UNI 7473	ECROU	MUTTER	NUT	TUERCA

COMPL. COMANDO 1° ATTIVAZIONE (3/8") CON AVVOLGITUBO

** Complètement commande 1ère activation (3/8") avec enrouleur*
** Vervollständigung Steuerung 1. Aktivierung (3/8") mit Schlauchwickler*
** 1st activation (3/8") control with hose reel, sequel*
** Completar mando 1ª activación (3/8") con enrollador*

TAV. SV.09.03

matr. G.A23.0001

PM
12523-23LC
12523S-23S LC
13523 SP-23 SP LC

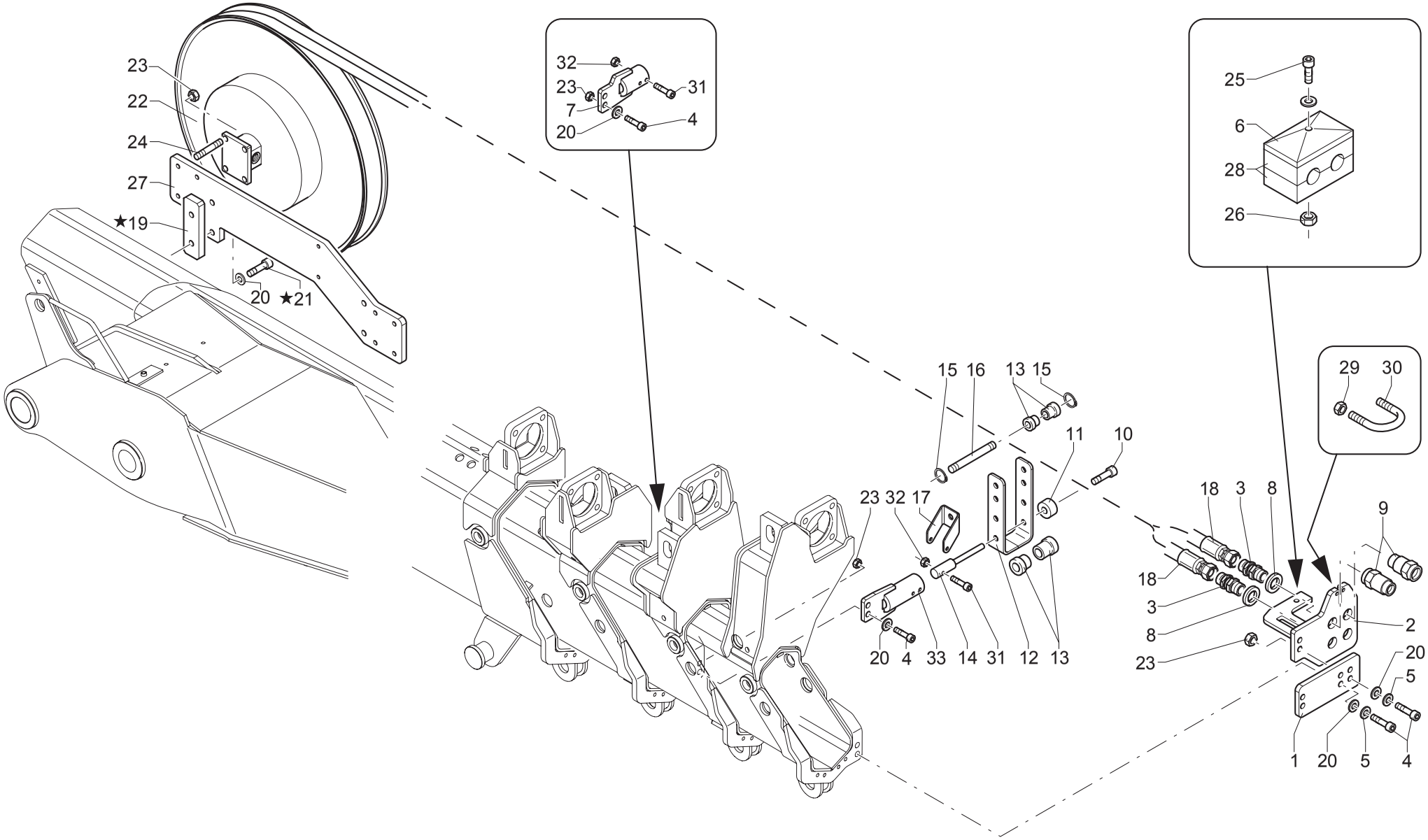

UNISTUDIO - Moder

POS.	N°CODICE	Q	DESCRIZIONE	DESIGNATION	BENENNUNG	DESCRIPTION	DENOMINACIONES
1	466718	1	SUPPORTO	SUPPORT	TRAEGER	SUPPORT	SOPORTE
2	466704	1	SUPPORTO	SUPPORT	TRAEGER	SUPPORT	SOPORTE
3	409735	2	RACCORDO	RACCORD	FITTING	FITTING	RACOR
4	497148	8	VITE TCEI M10X40 UNI 5931 8.8	VIS	SCHRAUBE	SCREW	TORNILLO
5	417005	4	ROSETTA 10,5X21 UNI 6592	RONDELLE	SCHEIBE	WASHER	ARANDELA
6	353118	1	PIASTRINA	PLAQUETTE	PLAETTCHEN	PLATE	CHAPETA
7	466700	1	SUPPORTO	SUPPORT	TRAEGER	SUPPORT	SOPORTE
8	417092	2	RONDELLA DOWTY BONDED SEAL PP45-D	RONDELLE	SCHEIBE	WASHER	ARANDELA
9	124001	2	ATTACCO RAPIDO	ATTACHE RAPIDE	SCHNELLE VERBINDUNG	QUICK COUPLING	ENCHUFE RAPIDO
10	498072	2	VITE TCEI M6X14 UNI 5931 8.8	VIS	SCHRAUBE	SCREW	TORNILLO
11	136518	2	DISTANZIALE	ENTRETOISE	DISTANZHULSE	SPACER	DISTANCIADOR
12	466460	2	SUPPORTO	SUPPORT	TRAEGER	SUPPORT	SOPORTE
13	429064	12	RULLO	GALET	ROLLE	ROLLER	RODILLO
14	380183	2	PERNO	AXE	BOLZEN	PIN	BULON
15	109001	12	ANELLO 10 UNI 7435	BAGUE	RING	RING	ARO
16	380157	6	PERNO	AXE	BOLZEN	PIN	BULON
17	208194	2	FERMO	ARRET	SPERRUNG	RETAINER	TOPE
18	486447	1	TUBO IN GOMMA	TUYAU FLEX.	SCHLAUCH	HOSE	LATIGUILLO
19 ★	466731	2	SUPPORTO (versione STD)	SUPPORT	TRAEGER	SUPPORT	SOPORTE
20	417026	12	RONDELLA SCHNORR S10 DACROMET	RONDELLE	SCHEIBE	WASHER	ARANDELA
21 ★	497147	4	VITE TCEI M10X35 UNI 5931 8.8 (vers. STD)	VIS	SCHRAUBE	SCREW	TORNILLO
21 ★	497145	4	VITE TCEI M10X25 UNI 5931 8.8 (vers. LC)	VIS	SCHRAUBE	SCREW	TORNILLO
22	469088	1	AVVOLGITUBO	ENROULEUR	SCHLAUCHWICKLER	HOSE REEL	ENROLLADOR
23	191092	12	DADO M10 UNI 7473	ECROU	MUTTER	NUT	TUERCA
24	497353	4	VITE PRIGION.M10X25 UNI 5911-66-8G	VIS	SCHRAUBE	SCREW	TORNILLO
25	498071	1	VITE TCEI M8X100 UNI 5931 8.8	VIS	SCHRAUBE	SCREW	TORNILLO

COMPL. COMANDO 1° ATTIVAZIONE (3/8") CON AVVOLGITUBO

** Complètement commande 1ère activation (3/8") avec enrouleur*
** Vervollständigung Steuerung 1. Aktivierung (3/8") mit Schlauchwickler*
** 1st activation (3/8") control with hose reel, sequel*
** Completar mando 1ª activación (3/8") con enrollador*

TAV. SV.09.03

matr. G.A23.0001

PM
12523-23LC
12523S-23S LC
13523 SP-23 SP LC

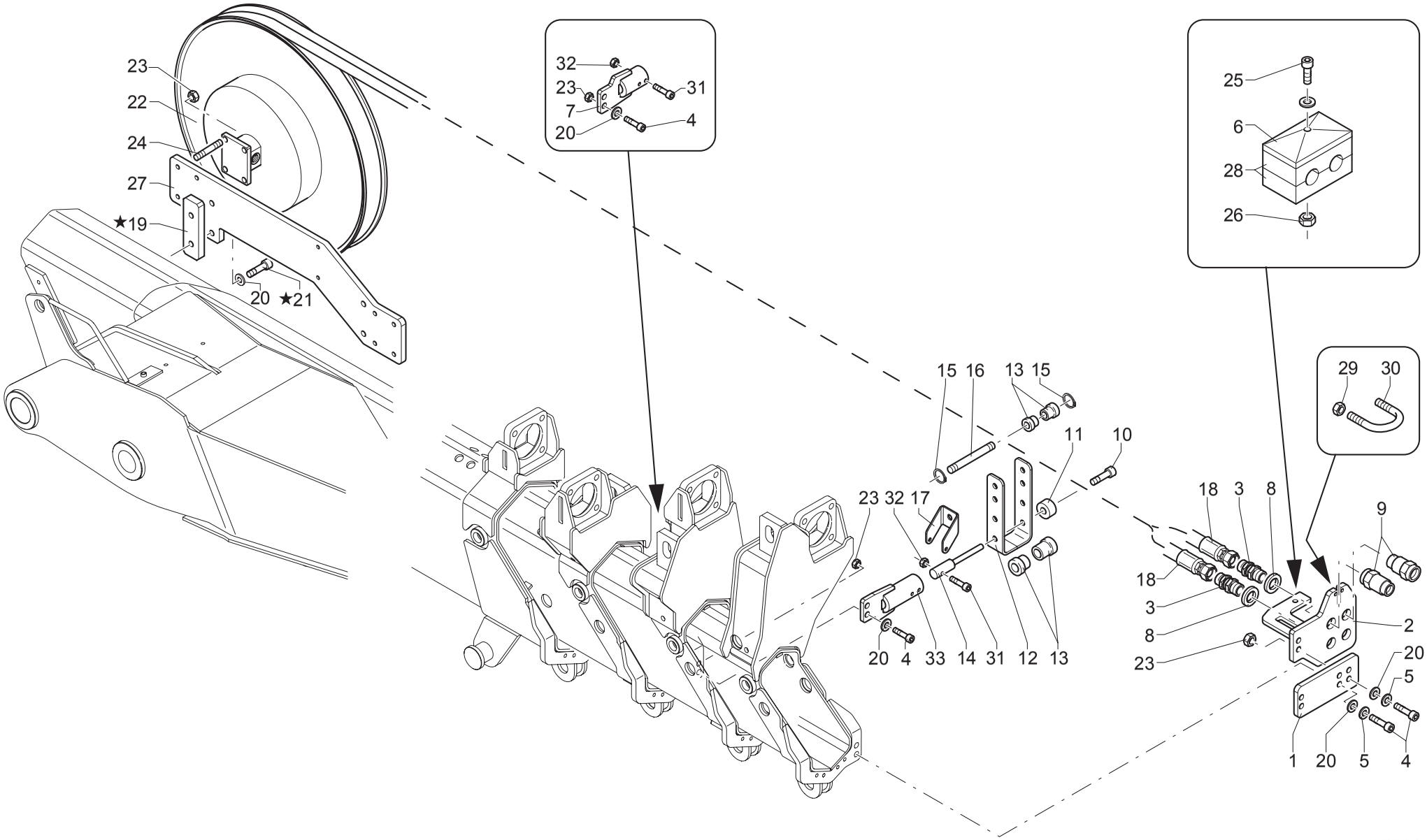

UNISTUDIO - Moder

POS.	N°CODICE	Q	DESCRIZIONE	DESIGNATION	BENENNUNG	DESCRIPTION	DENOMINACIONES
26	191090	1	DADO M8 UNI 7473	ECROU	MUTTER	NUT	TUERCA
27	300114	1	SUPPORTO	SUPPORT	TRAEGER	SUPPORT	SOPORTE
28	466765	2	MORSETTO	ARRETOIR	KLEMME	FASTENING UNIT	CONEXION
29	353117	1	FERMO	ARRET	SPERRUNG	RETAINER	TOPE
30	191125	2	DADO M6 UNI 7474	ECROU	MUTTER	NUT	TUERCA
31	497391	2	VITE	VIS	SCHRAUBE	SCREW	TORNILLO
32	191017	2	DADO M5 UNI 7473	ECROU	MUTTER	NUT	TUERCA
33	466716	1	SUPPORTO	SUPPORT	TRAEGER	SUPPORT	SOPORTE

COMPL. COMANDO 1° ATTIVAZIONE (3/8") CON AVVOLGITUBO

** Complètement commande 1ère activation (3/8") avec enrouleur*
** Vervollständigung Steuerung 1. Aktivierung (3/8") mit Schlauchwickler*
** 1st activation (3/8") control with hose reel, sequel*
** Completar mando 1ª activación (3/8") con enrollador*

TAV. SV.09.04

matr. G.A23.0001

PM
12524-24LC
12524S-24S LC
13524 SP-24 SP LC

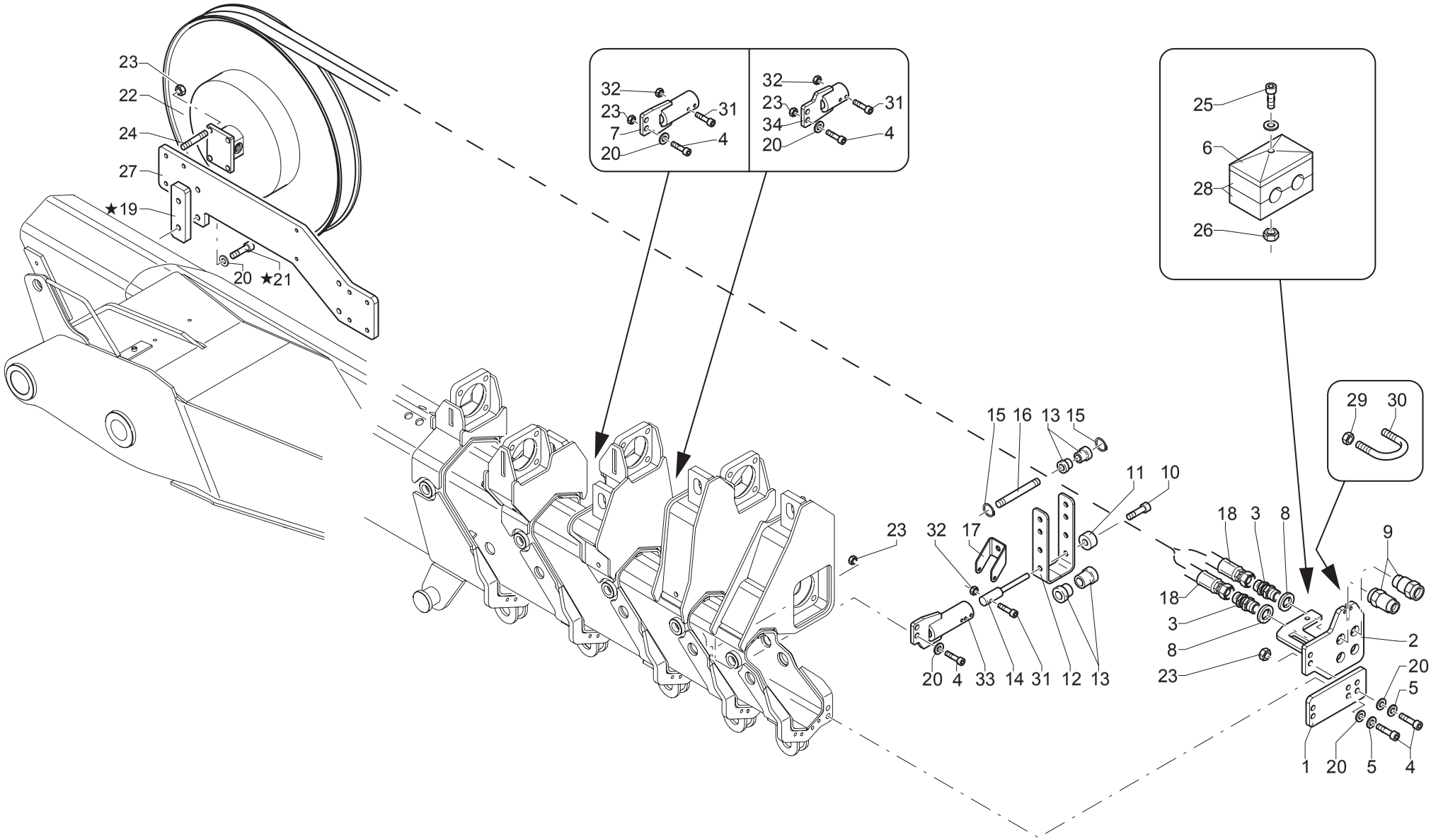

UNISTUDIO - Moder

POS.	N°CODICE	Q	DESCRIZIONE	DESIGNATION	BENENNUNG	DESCRIPTION	DENOMINACIONES
1	466718	1	SUPPORTO	SUPPORT	TRAEGER	SUPPORT	SOPORTE
2	466704	1	SUPPORTO	SUPPORT	TRAEGER	SUPPORT	SOPORTE
3	409735	2	RACCORDO	RACCORD	FITTING	FITTING	RACOR
4	497148	10	VITE TCEI M10X40 UNI 5931 8.8	VIS	SCHRAUBE	SCREW	TORNILLO
5	417005	4	ROSETTA 10,5X21 UNI 6592	RONDELLE	SCHEIBE	WASHER	ARANDELA
6	353118	1	PIASTRINA	PLAQUETTE	PLAETTCHEN	PLATE	CHAPETA
7	466700	1	SUPPORTO	SUPPORT	TRAEGER	SUPPORT	SOPORTE
8	417092	2	RONDELLA DOWTY BONDED SEAL PP45-D	RONDELLE	SCHEIBE	WASHER	ARANDELA
9	124001	2	ATTACCO RAPIDO	ATTACHE RAPIDE	SCHNELLE VERBINDUNG	QUICK COUPLING	ENCHUFE RAPIDO
10	498072	3	VITE TCEI M6X14 UNI 5931 8.8	VIS	SCHRAUBE	SCREW	TORNILLO
11	136518	3	DISTANZIALE	ENTRETOISE	DISTANZHULSE	SPACER	DISTANCIADOR
12	466460	3	SUPPORTO	SUPPORT	TRAEGER	SUPPORT	SOPORTE
13	429064	18	RULLO	GALET	ROLLE	ROLLER	RODILLO
14	380183	3	PERNO	AXE	BOLZEN	PIN	BULON
15	109001	18	ANELLO 10 UNI 7435	BAGUE	RING	RING	ARO
16	380157	9	PERNO	AXE	BOLZEN	PIN	BULON
17	208194	3	FERMO	ARRET	SPERRUNG	RETAINER	TOPE
18	485805	1	TUBO IN GOMMA	TUYAU FLEX.	SCHLAUCH	HOSE	LATIGUILLO
19 ★	466731	2	SUPPORTO (versione STD)	SUPPORT	TRAEGER	SUPPORT	SOPORTE
20	417026	14	RONDELLA SCHNORR S10 DACROMET	RONDELLE	SCHEIBE	WASHER	ARANDELA
21 ★	497147	4	VITE TCEI M10X35 UNI 5931 8.8 (vers. STD)	VIS	SCHRAUBE	SCREW	TORNILLO
21 ★	497145	4	VITE TCEI M10X25 UNI 5931 8.8 (vers. LC)	VIS	SCHRAUBE	SCREW	TORNILLO
22	469044	1	AVVOLGITUBO	ENROULEUR	SCHLAUCHWICKLER	HOSE REEL	ENROLLADOR
23	191092	14	DADO M10 UNI 7473	ECROU	MUTTER	NUT	TUERCA
24	497353	4	VITE PRIGION.M10X25 UNI 5911-66-8G	VIS	SCHRAUBE	SCREW	TORNILLO
25	498071	1	VITE TCEI M8X100 UNI 5931 8.8	VIS	SCHRAUBE	SCREW	TORNILLO

COMPL. COMANDO 1° ATTIVAZIONE (3/8") CON AVVOLGITUBO

** Complètement commande 1ère activation (3/8") avec enrouleur*
** Vervollständigung Steuerung 1. Aktivierung (3/8") mit Schlauchwickler*
** 1st activation (3/8") control with hose reel, sequel*
** Completar mando 1ª activación (3/8") con enrollador*

TAV. SV.09.04

matr. G.A23.0001

PM
12524-24LC
12524S-24S LC
13524 SP-24 SP LC

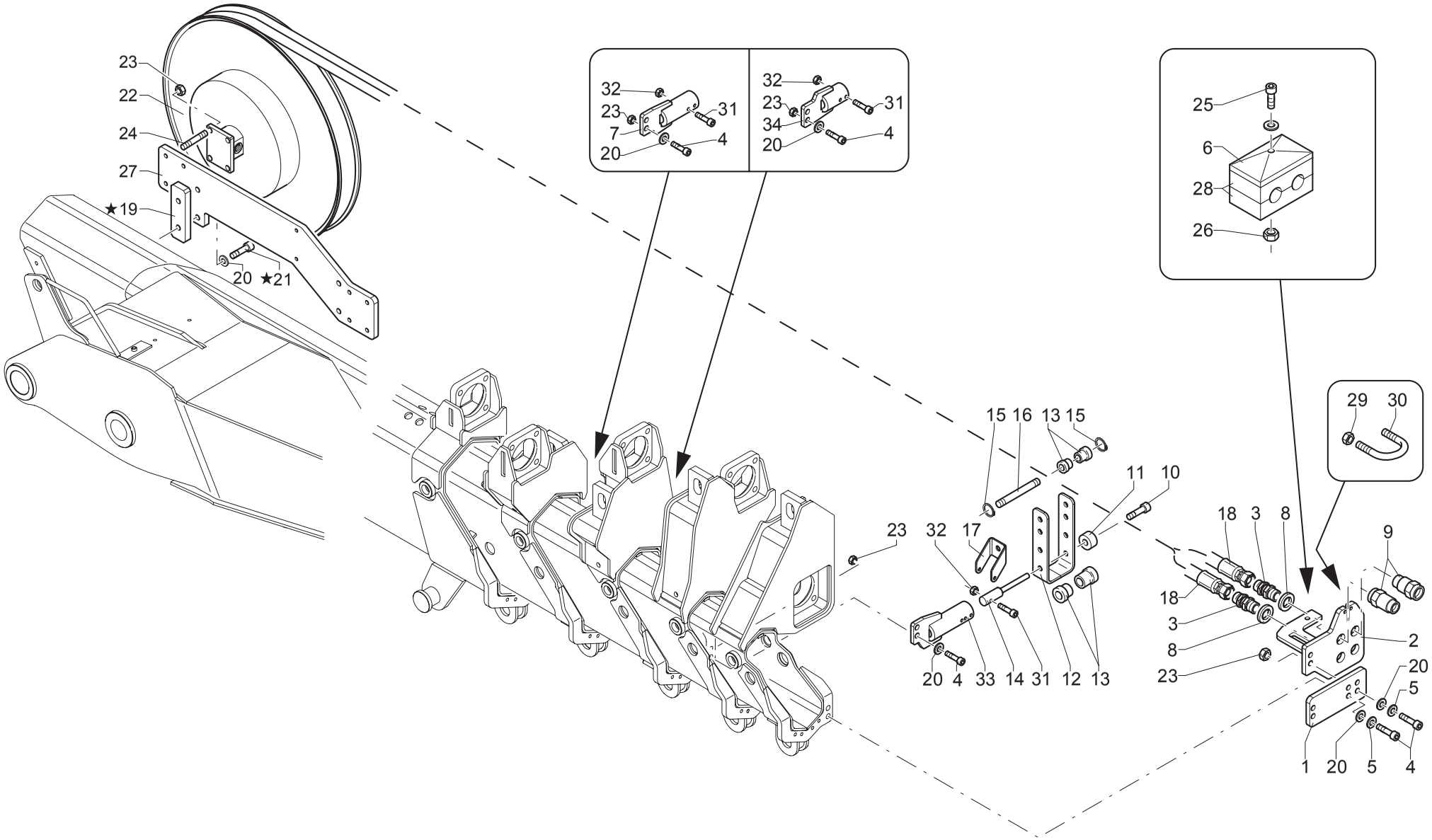

UNISTUDIO - Moder

POS.	N°CODICE	Q	DESCRIZIONE	DESIGNATION	BENENNUNG	DESCRIPTION	DENOMINACIONES
26	191090	1	DADO M8 UNI 7473	ECROU	MUTTER	NUT	TUERCA
27	300114	1	SUPPORTO	SUPPORT	TRAEGER	SUPPORT	SOPORTE
28	466765	2	MORSETTO	ARRETOIR	KLEMME	FASTENING UNIT	CONEXION
29	353117	1	FERMO	ARRET	SPERRUNG	RETAINER	TOPE
30	191125	2	DADO M6 UNI 7474	ECROU	MUTTER	NUT	TUERCA
31	497391	3	VITE	VIS	SCHRAUBE	SCREW	TORNILLO
32	191017	3	DADO M5 UNI 7473	ECROU	MUTTER	NUT	TUERCA
33	466715	1	SUPPORTO	SUPPORT	TRAEGER	SUPPORT	SOPORTE
34	466714	1	SUPPORTO	SUPPORT	TRAEGER	SUPPORT	SOPORTE

COMPL. COMANDO 1° ATTIVAZIONE (3/8") CON AVVOLGITUBO

** Complètement commande 1ère activation (3/8") avec enrouleur*
** Vervollständigung Steuerung 1. Aktivierung (3/8") mit Schlauchwickler*
** 1st activation (3/8") control with hose reel, sequel*
** Completar mando 1ª activación (3/8") con enrollador*

TAV. SV.09.05

matr. G.A23.0001

PM 12525
PM 12525 S
PM 13525 SP

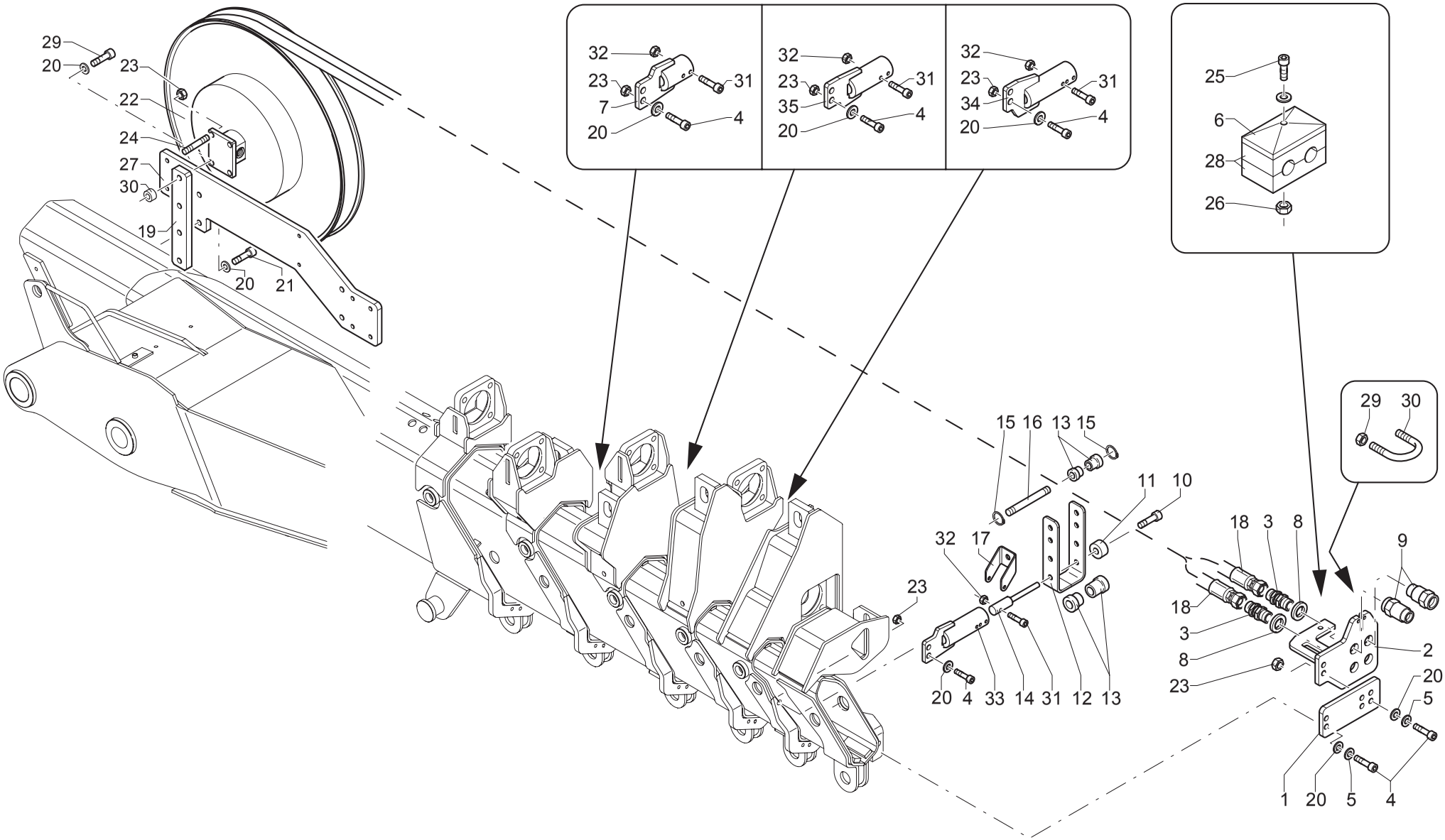

UNISTUDIO - Moder

POS.	N°CODICE	Q	DESCRIZIONE	DESIGNATION	BENENNUNG	DESCRIPTION	DENOMINACIONES
1	466717	1	SUPPORTO	SUPPORT	TRAEGER	SUPPORT	SOPORTE
2	466704	1	SUPPORTO	SUPPORT	TRAEGER	SUPPORT	SOPORTE
3	409735	2	RACCORDO	RACCORD	FITTING	FITTING	RACOR
4	497148	12	VITE TCEI M10X40 UNI 5931 8.8	VIS	SCHRAUBE	SCREW	TORNILLO
5	417005	4	ROSETTA 10,5X21 UNI 6592	RONDELLE	SCHEIBE	WASHER	ARANDELA
6	353118	1	PIASTRINA	PLAQUETTE	PLAETTCHEN	PLATE	CHAPETA
7	466714	1	SUPPORTO	SUPPORT	TRAEGER	SUPPORT	SOPORTE
8	417092	2	RONDELLA DOWTY BONDED SEAL PP45-D	RONDELLE	SCHEIBE	WASHER	ARANDELA
9	124001	2	ATTACCO RAPIDO	ATTACHE RAPIDE	SCHNELLE VERBINDUNG	QUICK COUPLING	ENCHUFE RAPIDO
10	498072	4	VITE TCEI M6X14 UNI 5931 8.8	VIS	SCHRAUBE	SCREW	TORNILLO
11	136518	4	DISTANZIALE	ENTRETOISE	DISTANZHULSE	SPACER	DISTANCIADOR
12	466460	4	SUPPORTO	SUPPORT	TRAEGER	SUPPORT	SOPORTE
13	429064	24	RULLO	GALET	ROLLE	ROLLER	RODILLO
14	380183	4	PERNO	AXE	BOLZEN	PIN	BULON
15	109001	24	ANELLO 10 UNI 7435	BAGUE	RING	RING	ARO
16	380157	12	PERNO	AXE	BOLZEN	PIN	BULON
17	208194	4	FERMO	ARRET	SPERRUNG	RETAINER	TOPE
18	482102	1	TUBO IN GOMMA	TUYAU FLEX.	SCHLAUCH	HOSE	LATIGUILLO
19	466720	2	SUPPORTO	SUPPORT	TRAEGER	SUPPORT	SOPORTE
20	417026	20	RONDELLA SCHNORR S10 DACROMET	RONDELLE	SCHEIBE	WASHER	ARANDELA
21	497149	4	VITE TCEI M10X45 UNI 5931 8.8	VIS	SCHRAUBE	SCREW	TORNILLO
22	469046	1	AVVOLGITUBO	ENROULEUR	SCHLAUCHWICKLER	HOSE REEL	ENROLLADOR
23	191092	16	DADO M10 UNI 7473	ECROU	MUTTER	NUT	TUERCA
24	497353	4	VITE PRIGION.M10X25 UNI 5911-66-8G	VIS	SCHRAUBE	SCREW	TORNILLO
25	498071	1	VITE TCEI M8X100 UNI 5931 8.8	VIS	SCHRAUBE	SCREW	TORNILLO
26	191090	1	DADO M8 UNI 7473	ECROU	MUTTER	NUT	TUERCA

COMPL. COMANDO 1° ATTIVAZIONE (3/8") CON AVVOLGITUBO

** Complètement commande 1ère activation (3/8") avec enrouleur*
** Vervollständigung Steuerung 1. Aktivierung (3/8") mit Schlauchwickler*
** 1st activation (3/8") control with hose reel, sequel*
** Completar mando 1ª activación (3/8") con enrollador*

TAV. SV.09.05

matr. G.A23.0001

PM 12525
PM 12525 S
PM 13525 SP

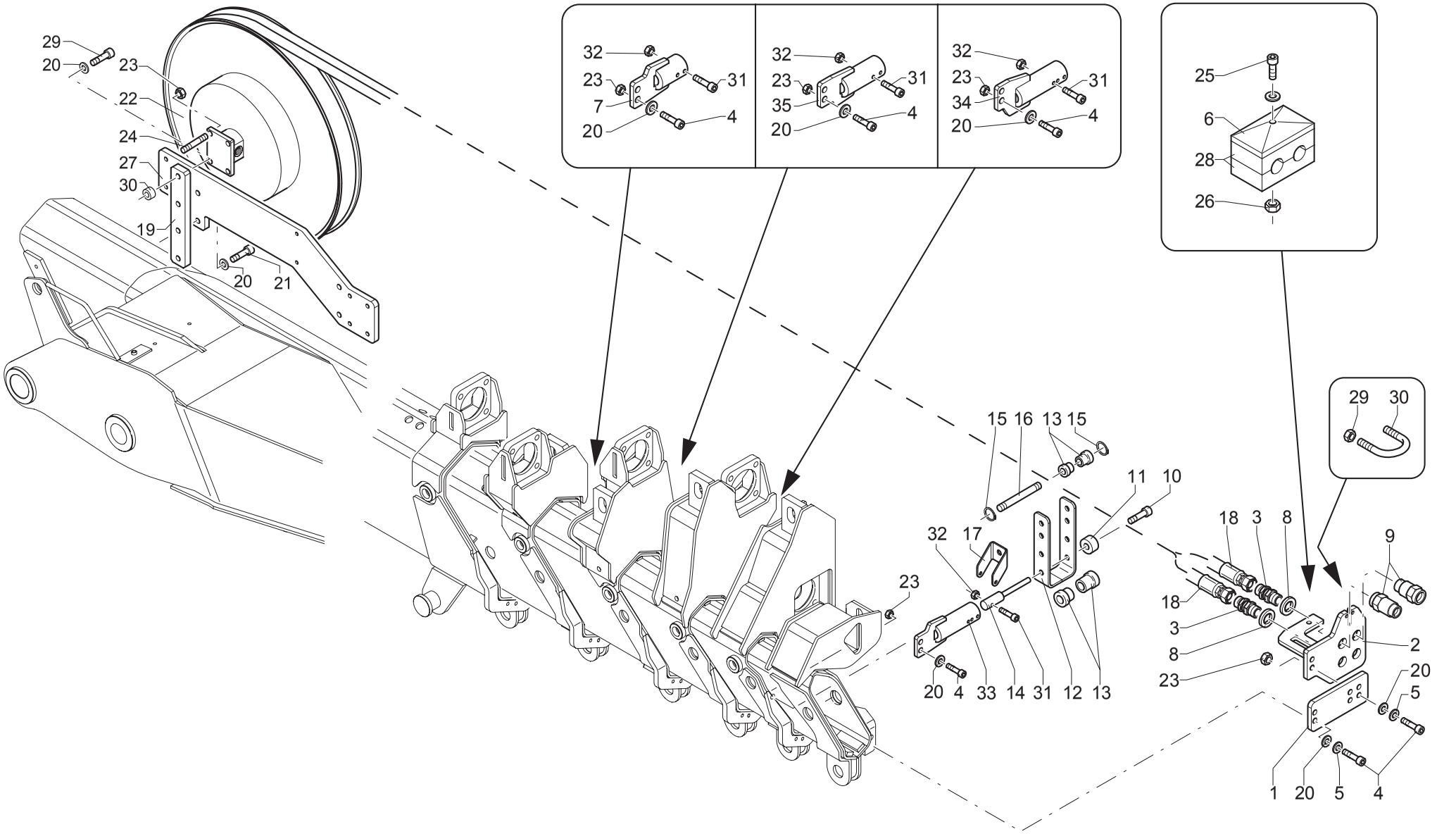

UNISTUDIO - Moder

POS.	N°CODICE	Q	DESCRIZIONE	DESIGNATION	BENENNUNG	DESCRIPTION	DENOMINACIONES
27	300114	1	SUPPORTO	SUPPORT	TRAEGER	SUPPORT	SOPORTE
28	466765	2	MORSETTO	ARRETOIR	KLEMME	FASTENING UNIT	CONEXION
29	497150	4	VITE TCEI M10X50 UNI 5931 8.8	VIS	SCHRAUBE	SCREW	TORNILLO
30	136683	4	BOCCOLA	DOUILLE	BUCHSE	BUSHING	CASQUILLO
31	497391	4	VITE	VIS	SCHRAUBE	SCREW	TORNILLO
32	191017	4	DADO M5 UNI 7473	ECROU	MUTTER	NUT	TUERCA
33	466698	1	SUPPORTO	SUPPORT	TRAEGER	SUPPORT	SOPORTE
34	466697	1	SUPPORTO	SUPPORT	TRAEGER	SUPPORT	SOPORTE
35	466699	1	SUPPORTO	SUPPORT	TRAEGER	SUPPORT	SOPORTE

COMPL. COMANDO 1° ATTIVAZIONE (3/8") CON AVVOLGITUBO

** Complètement commande 1ère activation (3/8") avec enrouleur*
** Vervollständigung Steuerung 1. Aktivierung (3/8") mit Schlauchwickler*
** 1st activation (3/8") control with hose reel, sequel*
** Completar mando 1ª activación (3/8") con enrollador*

TAV. SV.09.06

matr. G.A23.0001

PM 12525 LC
PM 12525 S LC
PM 13525 SP LC

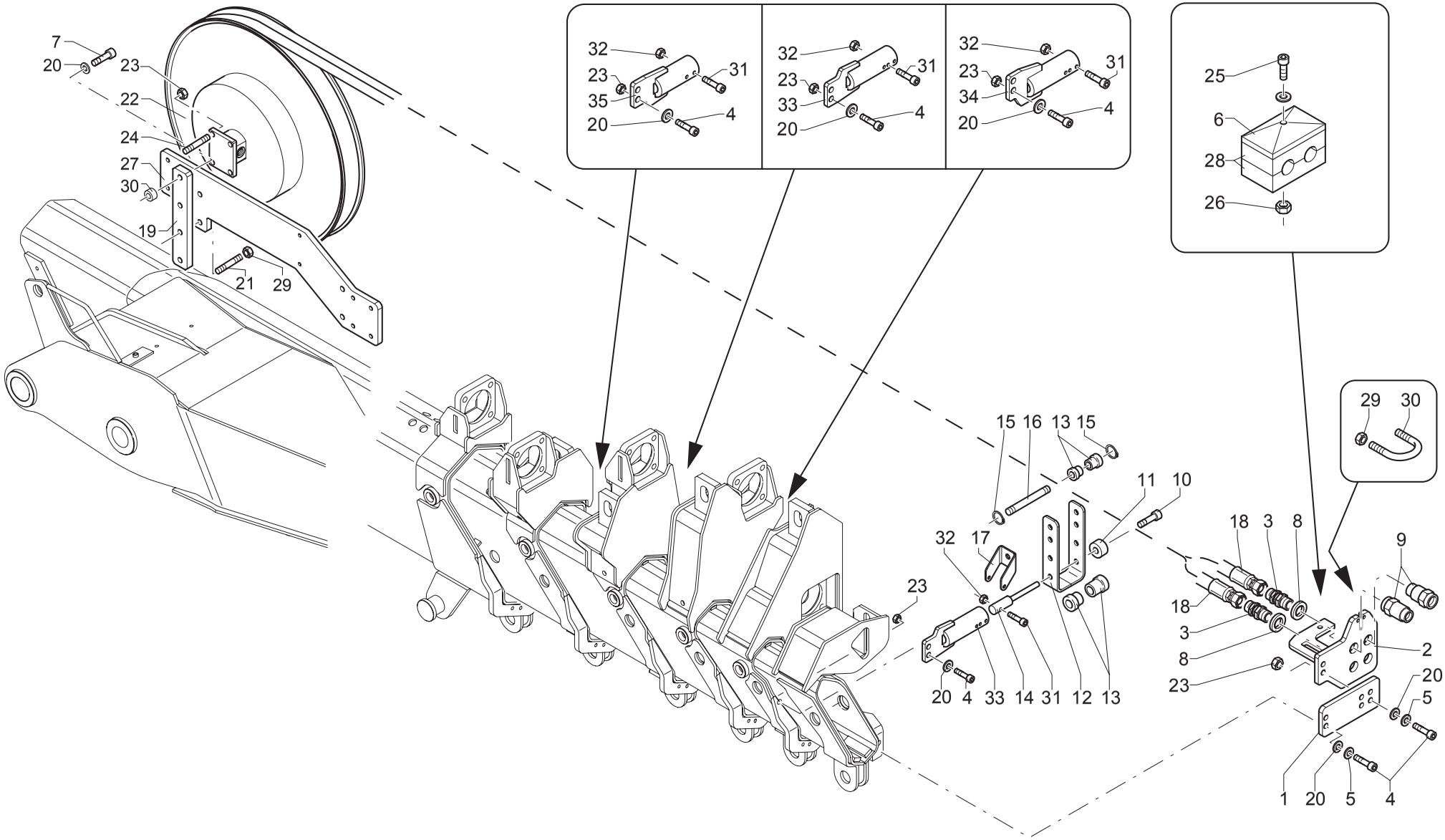

UNISTUDIO - Moder

POS.	N°CODICE	Q	DESCRIZIONE	DESIGNATION	BENENNUNG	DESCRIPTION	DENOMINACIONES
1	466717	1	SUPPORTO	SUPPORT	TRAEGER	SUPPORT	SOPORTE
2	466704	1	SUPPORTO	SUPPORT	TRAEGER	SUPPORT	SOPORTE
3	409735	2	RACCORDO	RACCORD	FITTING	FITTING	RACOR
4	497148	12	VITE TCEI M10X40 UNI 5931 8.8	VIS	SCHRAUBE	SCREW	TORNILLO
5	417005	4	ROSETTA 10,5X21 UNI 6592	RONDELLE	SCHEIBE	WASHER	ARANDELA
6	353118	1	PIASTRINA	PLAQUETTE	PLAETTCHEN	PLATE	CHAPETA
7	497429	1	VITE	VIS	SCHRAUBE	SCREW	TORNILLO
8	417092	2	RONDELLA DOWTY BONDED SEAL PP45-D	RONDELLE	SCHEIBE	WASHER	ARANDELA
9	124001	2	ATTACCO RAPIDO	ATTACHE RAPIDE	SCHNELLE VERBINDUNG	QUICK COUPLING	ENCHUFE RAPIDO
10	498072	4	VITE TCEI M6X14 UNI 5931 8.8	VIS	SCHRAUBE	SCREW	TORNILLO
11	136518	4	DISTANZIALE	ENTRETOISE	DISTANZHULSE	SPACER	DISTANCIADOR
12	466460	4	SUPPORTO	SUPPORT	TRAEGER	SUPPORT	SOPORTE
13	429064	24	RULLO	GALET	ROLLE	ROLLER	RODILLO
14	380183	4	PERNO	AXE	BOLZEN	PIN	BULON
15	109001	24	ANELLO 10 UNI 7435	BAGUE	RING	RING	ARO
16	380157	12	PERNO	AXE	BOLZEN	PIN	BULON
17	208194	4	FERMO	ARRET	SPERRUNG	RETAINER	TOPE
18	482102	1	TUBO IN GOMMA	TUYAU FLEX.	SCHLAUCH	HOSE	LATIGUILLO
19	466720	2	SUPPORTO	SUPPORT	TRAEGER	SUPPORT	SOPORTE
20	417026	16	RONDELLA SCHNORR S10 DACROMET	RONDELLE	SCHEIBE	WASHER	ARANDELA
21	497385	4	VITE	VIS	SCHRAUBE	SCREW	TORNILLO
22	469046	1	AVVOLGITUBO	ENROULEUR	SCHLAUCHWICKLER	HOSE REEL	ENROLLADOR
23	191092	16	DADO M10 UNI 7473	ECROU	MUTTER	NUT	TUERCA
24	497353	4	VITE PRIGION.M10X25 UNI 5911-66-8G	VIS	SCHRAUBE	SCREW	TORNILLO
25	498071	1	VITE TCEI M8X100 UNI 5931 8.8	VIS	SCHRAUBE	SCREW	TORNILLO
26	191090	1	DADO M8 UNI 7473	ECROU	MUTTER	NUT	TUERCA

COMPL. COMANDO 1° ATTIVAZIONE (3/8") CON AVVOLGITUBO

** Complètement commande 1ère activation (3/8") avec enrouleur*
** Vervollständigung Steuerung 1. Aktivierung (3/8") mit Schlauchwickler*
** 1st activation (3/8") control with hose reel, sequel*
** Completar mando 1ª activación (3/8") con enrollador*

TAV. SV.09.06

matr. G.A23.0001

PM 12525 LC
PM 12525 S LC
PM 13525 SP LC

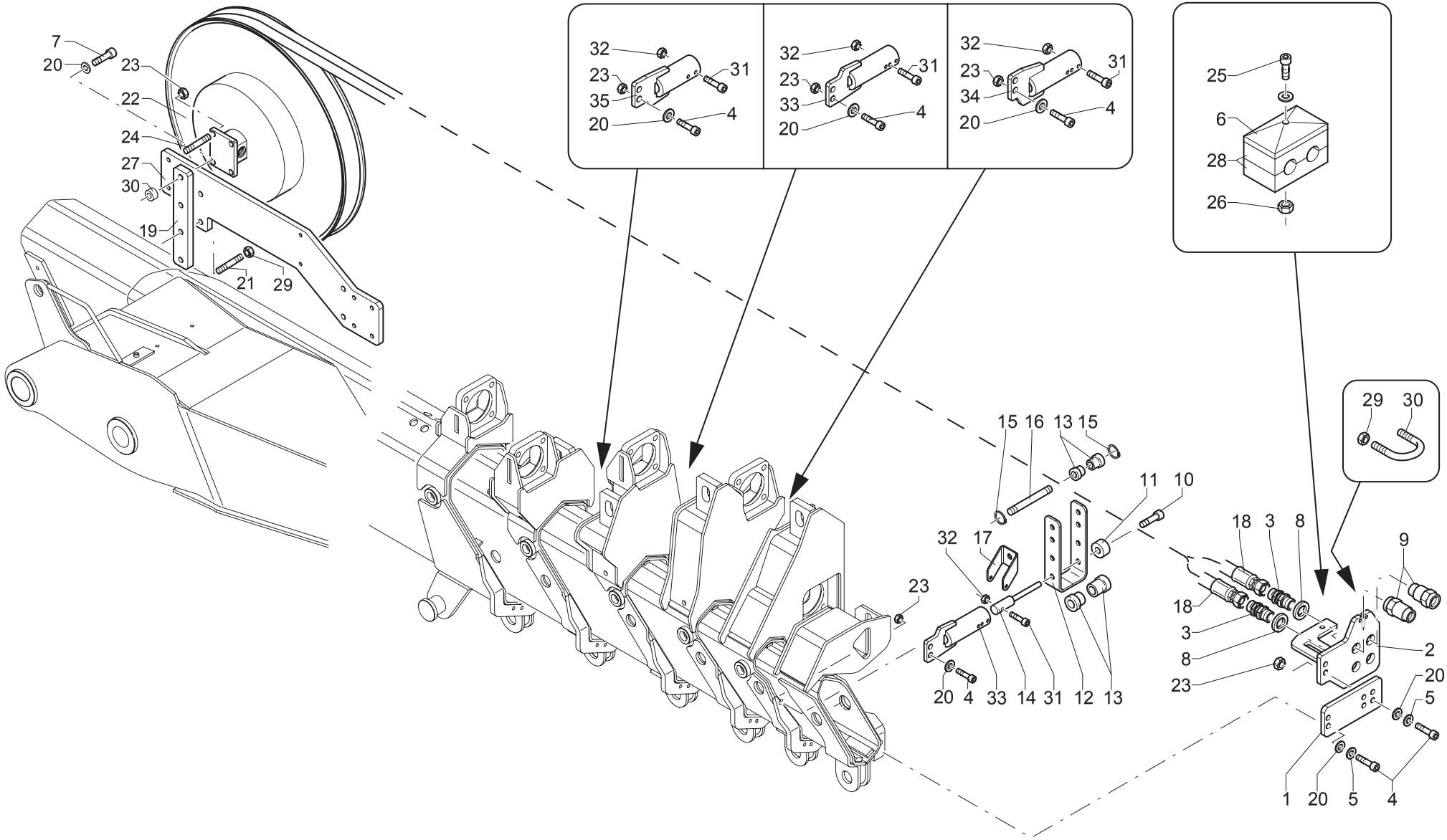

UNISTUDIO - Moder

POS.	N°CODICE	Q	DESCRIZIONE	DESIGNATION	BENENNUNG	DESCRIPTION	DENOMINACIONES
27	300114	1	SUPPORTO	SUPPORT	TRAEGER	SUPPORT	SOPORTE
28	466765	2	MORSETTO	ARRETOIR	KLEMME	FASTENING UNIT	CONEXION
29	191206	4	DADO M10 UNI7474	ECROU	MUTTER	NUT	TUERCA
30	136670	4	BOCCOLA	DOUILLE	BUCHSE	BUSHING	CASQUILLO
31	497391	4	VITE	VIS	SCHRAUBE	SCREW	TORNILLO
32	191017	4	DADO M5 UNI 7473	ECROU	MUTTER	NUT	TUERCA
33	466698	2	SUPPORTO	SUPPORT	TRAEGER	SUPPORT	SOPORTE
34	466697	1	SUPPORTO	SUPPORT	TRAEGER	SUPPORT	SOPORTE
35	466699	1	SUPPORTO	SUPPORT	TRAEGER	SUPPORT	SOPORTE

COMPL. COMANDO 2° ATTIVAZIONE (3/8") CON AVVOLGITUBO

** Complètement commande 2ème activation (3/8") avec enrouleur*
** Vervollständigung Steuerung 2. Aktivierung (3/8") mit Schlauchwickler*
** 2nd activation (3/8") control with hose reel, sequel*
** Completar mando 2ª activación (3/8") con enrollador*

TAV. SV.10.01

matr. G.A23.0001

PM
12,5-12,5 LC
12,5 S-12,5 S LC
13,5 SP-13,5 SP LC

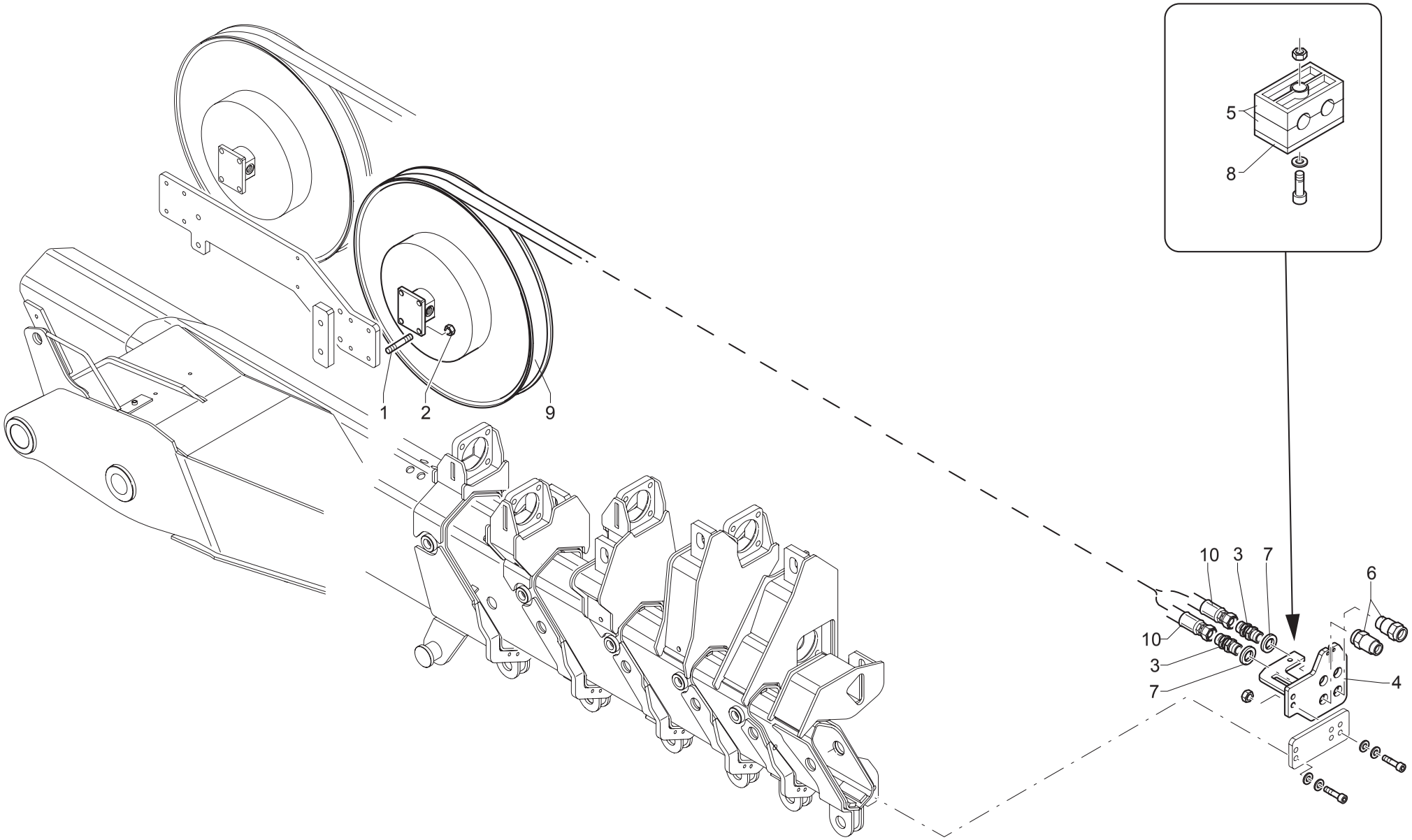

UNISTUDIO - Moder

POS.	N°CODICE	Q	DESCRIZIONE	DESIGNATION	BENENNUNG	DESCRIPTION	DENOMINACIONES
1	497353	4	VITE PRIGION.M10X25 UNI 5911-66-8G	VIS	SCHRAUBE	SCREW	TORNILLO
2	191092	4	DADO M10 UNI 7473	ECROU	MUTTER	NUT	TUERCA
3	409735	2	RACCORDO	RACCORD	FITTING	FITTING	RACOR
4	466735	1	SUPPORTO	SUPPORT	TRAEGER	SUPPORT	SOPORTE
5	466765	2	MORSETTO	ARRETOIR	KLEMME	FASTENING UNIT	CONEXION
6	124001	2	ATTACCO RAPIDO	ATTACHE RAPIDE	SCHNELLE VERBINDUNG	QUICK COUPLING	ENCHUFE RAPIDO
7	417092	2	RONDELLA DOWTY BONDED SEAL PP45-D	RONDELLE	SCHEIBE	WASHER	ARANDELA
8	353118	1	PIASTRINA	PLAQUETTE	PLAETTCHEN	PLATE	CHAPETA
9	469023	1	AVVOLGITUBO (PM 12521-22)	ENROULEUR	SCHLAUCHWICKLER	HOSE REEL	ENROLLADOR
9	469088	1	AVVOLGITUBO (PM 12523)	ENROULEUR	SCHLAUCHWICKLER	HOSE REEL	ENROLLADOR
9	469044	1	AVVOLGITUBO (PM 12524)	ENROULEUR	SCHLAUCHWICKLER	HOSE REEL	ENROLLADOR
9	469046	1	AVVOLGITUBO (PM 12525)	ENROULEUR	SCHLAUCHWICKLER	HOSE REEL	ENROLLADOR
10	486092	1	TUBO IN GOMMA (PM 12521)	TUYAU FLEX.	SCHLAUCH	HOSE	LATIGUILLO
10	486448	1	TUBO IN GOMMA (PM 12522)	TUYAU FLEX.	SCHLAUCH	HOSE	LATIGUILLO
10	486447	1	TUBO IN GOMMA (PM 12523)	TUYAU FLEX.	SCHLAUCH	HOSE	LATIGUILLO
10	485805	1	TUBO IN GOMMA (PM 12524)	TUYAU FLEX.	SCHLAUCH	HOSE	LATIGUILLO
10	482102	1	TUBO IN GOMMA (PM 12525)	TUYAU FLEX.	SCHLAUCH	HOSE	LATIGUILLO

COMANDO ATTIVAZIONE VERRICELLO

** Commande activation treuil*
** Winch activation control*
** Windebetätigungssteuerung*
** Mando activación cabrestante*

TAV. SV.11.01

matr. G.A23.0001

PM 12,5
PM 12,5 S
PM 13,5 SP

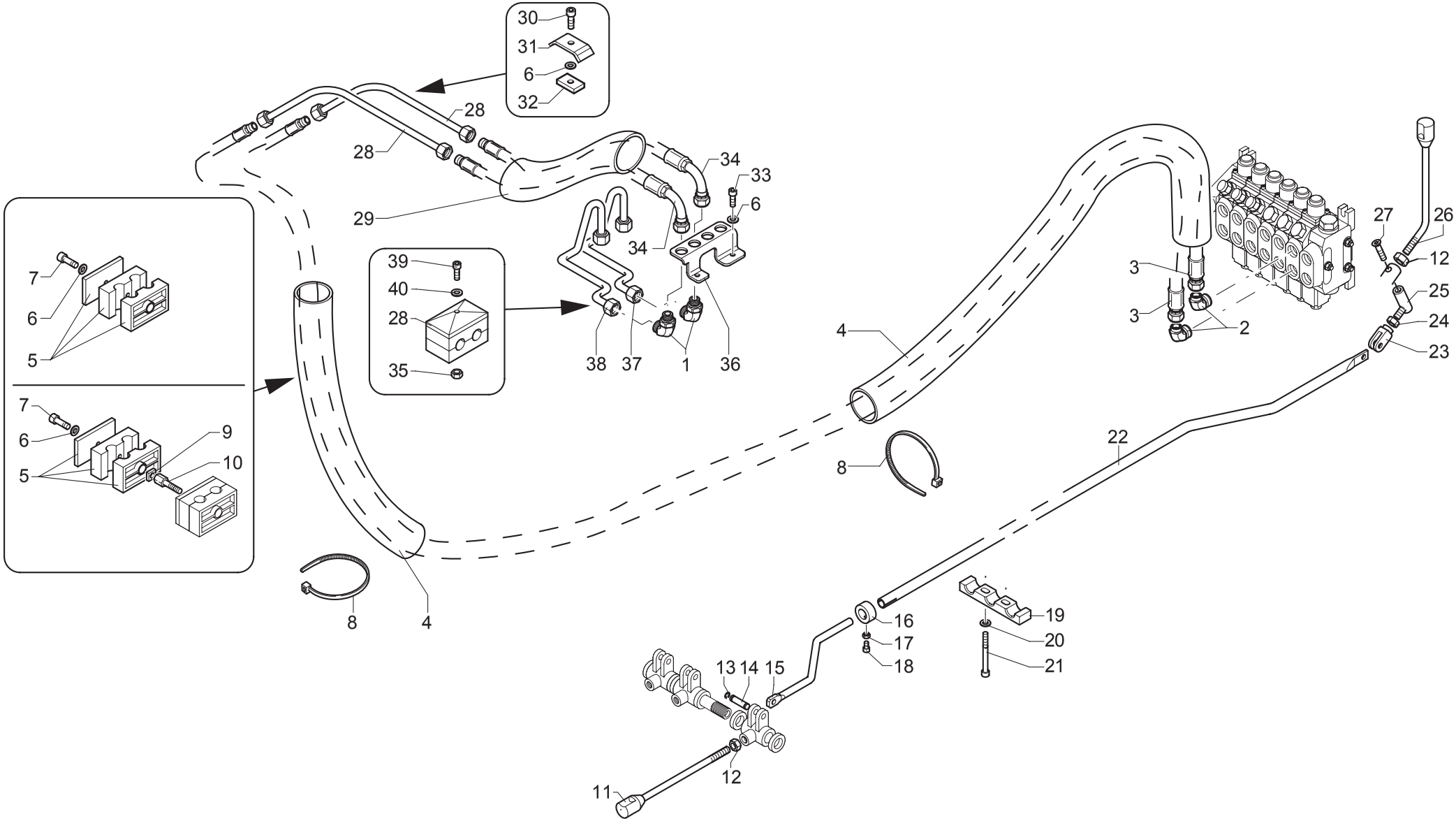

UNISTUDIO - Moder

POS.	N°CODICE	Q	DESCRIZIONE	DESIGNATION	BENENNUNG	DESCRIPTION	DENOMINACIONES
1	409481	2	RACCORDO	RACCORD	FITTING	FITTING	RACOR
2	409478	2	RACCORDO	RACCORD	FITTING	FITTING	RACOR
3	486415	2	TUBO IN GOMMA	TUYAU FLEX.	SCHLAUCH	HOSE	LATIGUILLO
4	276061	2	GUAINA	GAINE	MANTEL	SHEATH	MANGERA
5	353079	2	MORSETTO	ARRETOIR	KLEMME	FASTENING UNIT	CONEXION
6	417025	7	RONDELLA SCHNORR S8 ZN	RONDELLE	SCHEIBE	WASHER	ARANDELA
7	497134	2	VITE TCEI M8X35 UNI 5931 8.8	VIS	SCHRAUBE	SCREW	TORNILLO
8	207025	6	FASCETTA	COLLIER	HALTEBAND	CLAMP	ABRAZADERA
9	417210	1	RONDELLA	RONDELLE	SCHEIBE	WASHER	ARANDELA
10	498116	1	VITE	VIS	SCHRAUBE	SCREW	TORNILLO
11	120051	1	LEVA	LEVIER	HEBEL	LEVER	PALANCA
12	191036	2	DADO M10 UNI 5588	ECROU	MUTTER	NUT	TUERCA
13	109159	2	ANELLO 6 UNI 7434	JOINT D'ARRET	SPRENGRING	SPRING RING	SEEGER
14	379322	1	PERNO	AXE	BOLZEN	PIN	BULON
15	283018	1	TIRANTE	TIRANT	ZUGSTANGE	TIEROD	BARILLA
16	112167	1	BOCCOLA	DOUILLE	BUCHSE	BUSHING	CASQUILLO
17	191062	1	DADO M6 UNI 5589	ECROU	MUTTER	NUT	TUERCA
18	497118	1	VITE TCEI M6X16 UNI 5931 8.8	VIS	SCHRAUBE	SCREW	TORNILLO
19	353068	1	MORSETTO	ARRETOIR	KLEMME	FASTENING UNIT	CONEXION
20	417004	2	ROSETTA 8,4X17 UNI 6592	RONDELLE	SCHEIBE	WASHER	ARANDELA
21	497141	2	VITE TCEI M8X80 UNI 5931 8.8	VIS	SCHRAUBE	SCREW	TORNILLO
22	481263	1	TIRANTE	TIRANT	ZUGSTANGE	TIEROD	BARILLA
23	220018	1	FORCELLA	FOURCHE	GABEL	YOKE	HORQUILLA
24	191035	1	DADO M8 UNI 5588	ECROU	MUTTER	NUT	TUERCA
25	379727	1	PERNO	AXE	BOLZEN	PIN	BULON
26	120746	1	LEVA	LEVIER	HEBEL	LEVER	PALANCA

COMANDO ATTIVAZIONE VERRICELLO

** Commande activation treuil*
** Winch activation control*
** Windebetätigungssteuerung*
** Mando activación cabrestante*

TAV. SV.11.01

matr. G.A23.0001

PM 12,5
PM 12,5 S
PM 13,5 SP

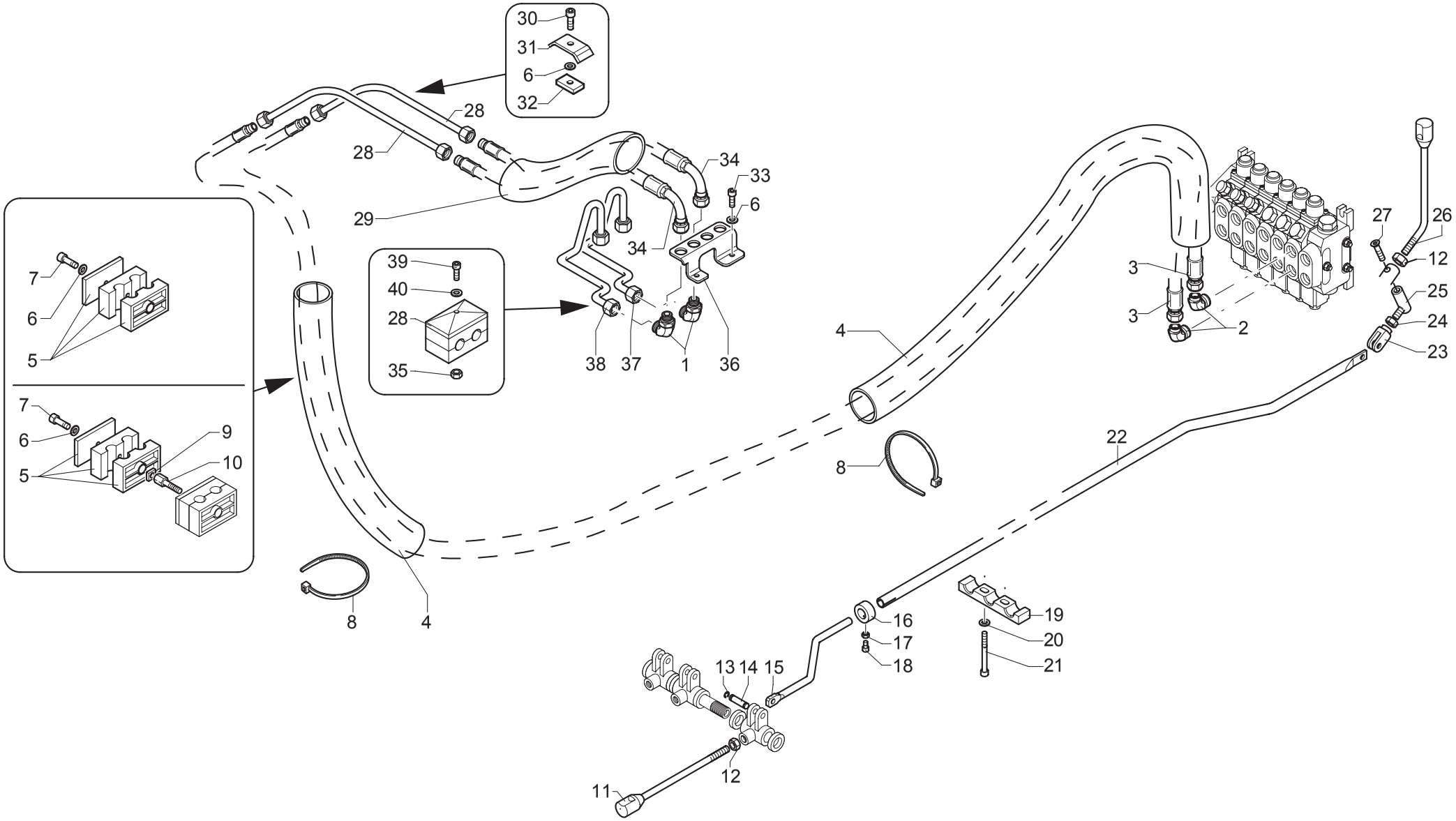

UNISTUDIO - Moder

POS.	N°CODICE	Q	DESCRIZIONE	DESIGNATION	BENENNUNG	DESCRIPTION	DENOMINACIONES
27	498099	1	VITE TSPEI M8X30 UNI 5933 10.9	VIS	SCHRAUBE	SCREW	TORNILLO
28	493535	2	TUBO IN FERRO	TUYAU EN FER	EISEN-ROHR	IRON PIPE	TUBO DE HIERRO
29	276037	1	GUAINA	GAINE	MANTEL	SHEATH	MANGERA
30	497130	3	VITE TCEI M8X16 UNI 5931 8.8	VIS	SCHRAUBE	SCREW	TORNILLO
31	353099	3	MORSETTO	ARRETOIR	KLEMME	FASTENING UNIT	CONEXION
32	262170	3	SPESSORE	CALE D'EPAISSEUR	BEILAGE	SHIM	ESPESOR
33	497209	2	VITE TCEI M8X12 UNI 5931 8.8	VIS	SCHRAUBE	SCREW	TORNILLO
34	486998	2	TUBO IN GOMMA	TUYAU FLEX.	SCHLAUCH	HOSE	LATIGUILLO
35	191162	1	DADO M6 UNI 7473	ECROU	MUTTER	NUT	TUERCA
36	466611	1	SUPPORTO	SUPPORT	TRAEGER	SUPPORT	SOPORTE
37	493543	1	TUBO IN FERRO	TUYAU EN FER	EISEN-ROHR	IRON PIPE	TUBO DE HIERRO
38	493544	1	TUBO IN FERRO	TUYAU EN FER	EISEN-ROHR	IRON PIPE	TUBO DE HIERRO
39	497125	1	VITE TCEI M6X50 UNI 5931 8.8	VIS	SCHRAUBE	SCREW	TORNILLO
40	417003	1	ROSETTA 6,4X12,5 UNI 6592	RONDELLE	SCHEIBE	WASHER	ARANDELA
41	353076	1	MORSETTO	ARRETOIR	KLEMME	FASTENING UNIT	CONEXION

COMPLETAMENTO IMPIANTO VERRICELLO

** Complètement installation vérin*
** Completion of the winch system*
** Erganzung Windenanlage*
** Completamiento instalación cabrestante*

TAV. SV.12.01

matr. G.A23.0001

PM 12,5
PM 12,5 S
PM 13,5 SP

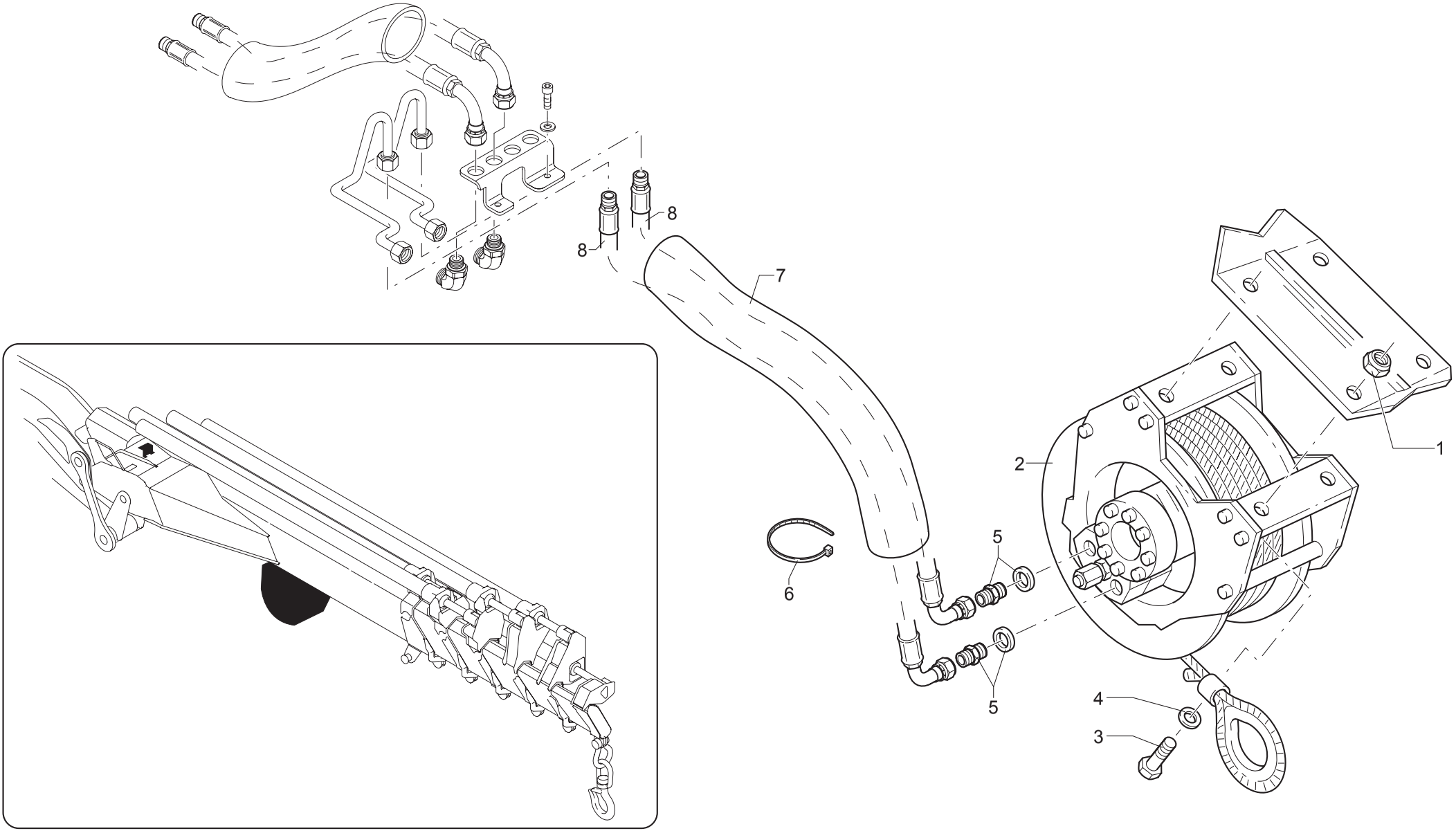

UNISTUDIO - Moder

POS.	N°CODICE	Q	DESCRIZIONE	DESIGNATION	BENENNUNG	DESCRIPTION	DENOMINACIONES
1	191096	4	DADO M14 UNI 7473	ECROU	MUTTER	NUT	TUERCA
2	119027	1	VERRICELLO	TREUIL	SCHWING. DAMPFER	WINCH	CABRESTANTE
3	497060	4	VITE TCEI M14X60 UNI 5739 10.9	VIS	SCHRAUBE	SCREW	TORNILLO
4	417028	4	RONDELLA SCHNORR S14 ZN	RONDELLE	SCHEIBE	WASHER	ARANDELA
5	409380	2	RACCORDO	RACCORD	FITTING	FITTING	RACOR
6	207025	2	FASCETTA	COLLIER	HALTEBAND	CLAMP	ABRAZADERA
7	276059	1	GUAINA	GAINE	MANTEL	SHEATH	MANGERA
8	486405	2	TUBO IN GOMMA	TUYAU FLEX.	SCHLAUCH	HOSE	LATIGUILLO

BOZZELLO

* Poulie
* Line block
* Seilblock
* Poleas

TAV. SV.13.01

matr. G.A23.0001

PM 12,5
PM 12,5 S
PM 13,5 SP

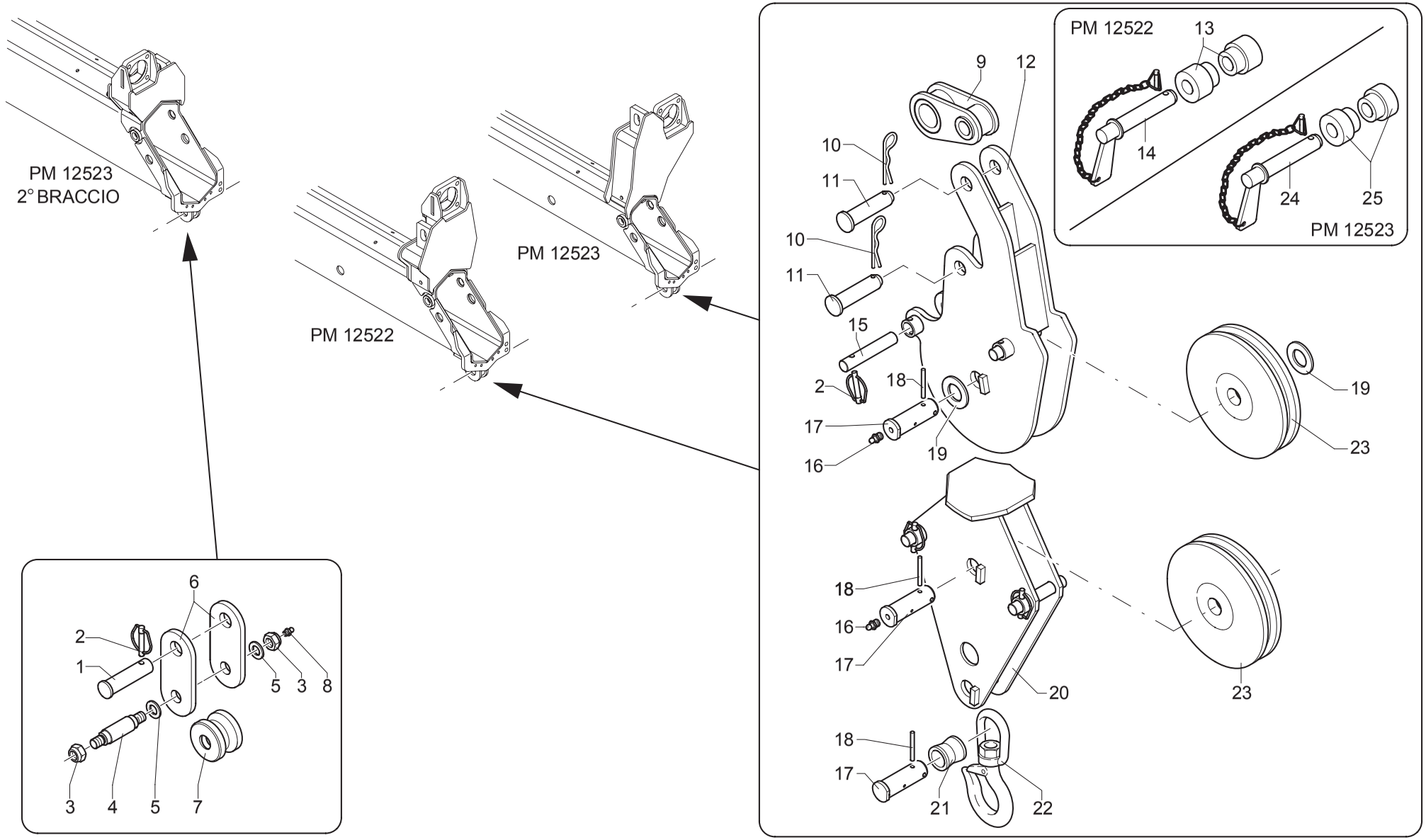

UNISTUDIO - Moder

POS.	N°CODICE	Q	DESCRIZIONE	DESIGNATION	BENENNUNG	DESCRIPTION	DENOMINACIONES
1	380272	1	PERNO	AXE	BOLZEN	PIN	BULON
2	177079	5	COPPIGLIA	GOUPILLE	SPLINT	SPLIT PIN	PASADOR
3	191089	2	DADO	ECROU	MUTTER	NUT	TUERCA
4	380238	1	PERNO	AXE	BOLZEN	PIN	BULON
5	417008	2	ROSETTA 17X30 UNI 6592	RONDELLE	SCHEIBE	WASHER	ARANDELA
6	209069	2	FIANCATA	COTE	SEITENWAND	SIDE PANEL	LADO
7	405026	1	PULEGGIA	POULIE	SCHEIBE	PULLEY	POLEA
8	281004	1	INGRASSATORE	GRAISSEUR	SCHMIERER	GREASE FITTING	ENGRASADOR
9	220075	1	FORCELLA	FOURCHE	GABEL	YOKE	HORQUILLA
10	451003	2	COPPIGLIA	GOUPILLE	SPLINT	SPLIT PIN	PASADOR
11	379585	2	PERNO	AXE	BOLZEN	PIN	BULON
12	466574	1	SUPPORTO	SUPPORT	TRAEGER	SUPPORT	SOPORTE
13	136589	2	DISTANZIALE	ENTRETOISE	DISTANZHULSE	SPACER	DISTANCIADOR
14	379202	1	PERNO	AXE	BOLZEN	PIN	BULON
15	380192	4	PERNO	AXE	BOLZEN	PIN	BULON
16	281010	2	INGRASSATORE	GRAISSEUR	SCHMIERER	GREASE FITTING	ENGRASADOR
17	380254	3	PERNO	AXE	BOLZEN	PIN	BULON
18	455007	3	SPINA 6X55 UNI 6873	GOUPILLE	STIFT	PIN	PASADOR
19	417202	2	ROSETTA 31X56 UNI 6592	RONDELLE	SCHEIBE	WASHER	ARANDELA
20	466575	1	SUPPORTO	SUPPORT	TRAEGER	SUPPORT	SOPORTE
21	136588	1	BOCCOLA	DOUILLE	BUCHSE	BUSHING	CASQUILLO
22	235061	1	GANCIO	CROCHET	HAKEN	HOOK	GANCHO
23	405030	2	PULEGGIA	POULIE	SCHEIBE	PULLEY	POLEA
24	379203	1	PERNO	AXE	BOLZEN	PIN	BULON
25	136591	2	DISTANZIALE	ENTRETOISE	DISTANZHULSE	SPACER	DISTANCIADOR

BOZZELLO

** Poulie*
** Line block*

** Seilblock*
** Poleas*

TAV. SV.14.01

matr. G.A23.0001

PM 12524-25
PM 12524-25 S
PM 13524-25 SP

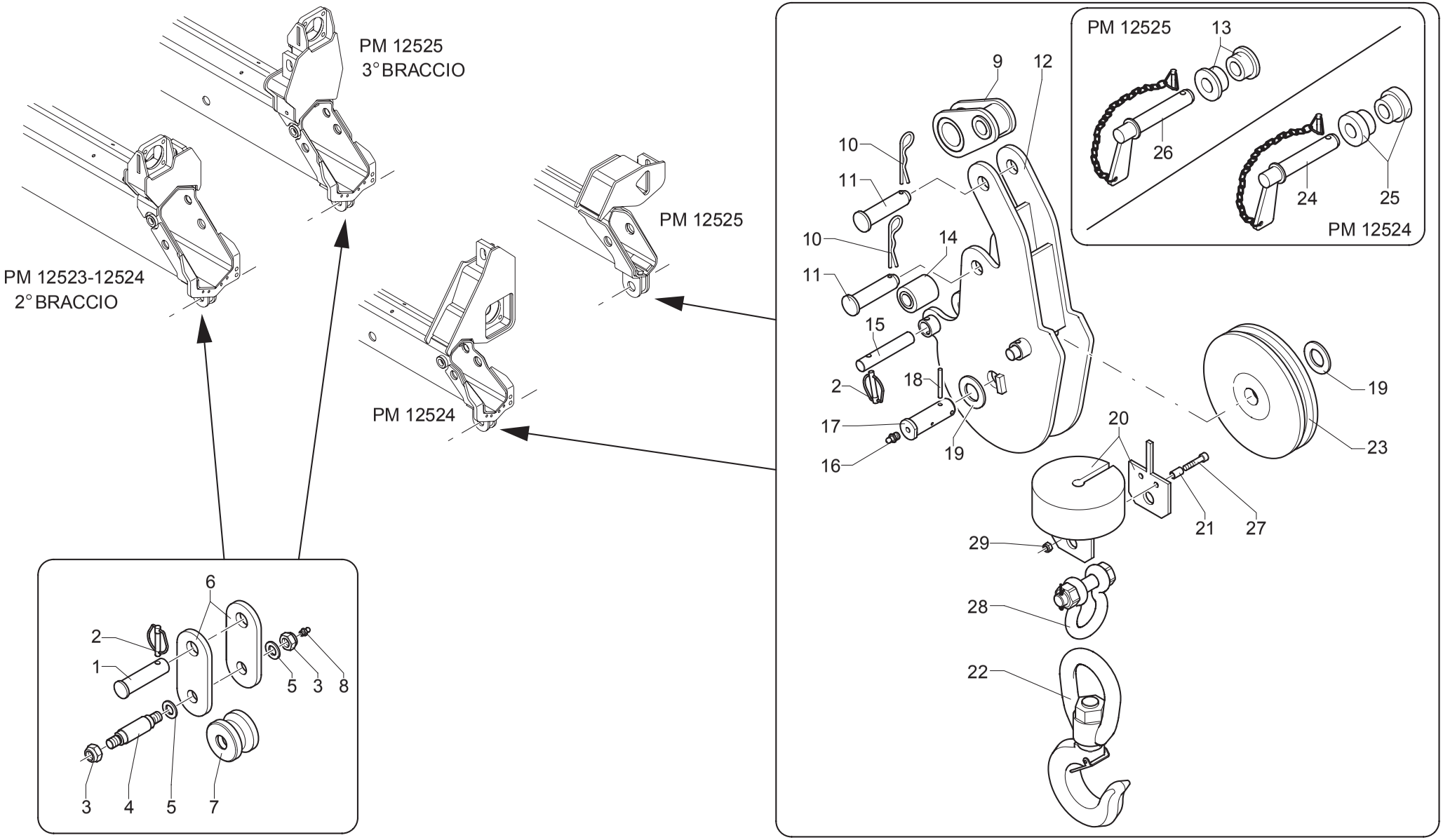

POS.	N°CODICE	Q	DESCRIZIONE	DESIGNATION	BENENNUNG	DESCRIPTION	DENOMINACIONES
1	380272	1	PERNO	AXE	BOLZEN	PIN	BULON
2	177079	3	COPPIGLIA	GOUPILLE	SPLINT	SPLIT PIN	PASADOR
3	191089	2	DADO	ECROU	MUTTER	NUT	TUERCA
4	380238	1	PERNO	AXE	BOLZEN	PIN	BULON
5	417008	2	ROSETTA 17X30 UNI 6592	RONDELLE	SCHEIBE	WASHER	ARANDELA
6	209069	2	FIANCATA	COTE	SEITENWAND	SIDE PANEL	LADO
7	405026	1	PULEGGIA	POULIE	SCHEIBE	PULLEY	POLEA
8	281004	1	INGRASSATORE	GRAISSEUR	SCHMIERER	GREASE FITTING	ENGRASADOR
9	220075	1	FORCELLA	FOURCHE	GABEL	YOKE	HORQUILLA
10	451003	2	COPPIGLIA	GOUPILLE	SPLINT	SPLIT PIN	PASADOR
11	379585	2	PERNO	AXE	BOLZEN	PIN	BULON
12	466574	1	SUPPORTO	SUPPORT	TRAEGER	SUPPORT	SOPORTE
13	136587	2	DISTANZIALE	ENTRETOISE	DISTANZHULSE	SPACER	DISTANCIADOR
14	429065	1	RULLO	GALET	ROLLE	ROLLER	RODILLO
15	380192	2	PERNO	AXE	BOLZEN	PIN	BULON
16	281010	1	INGRASSATORE	GRAISSEUR	SCHMIERER	GREASE FITTING	ENGRASADOR
17	380254	1	PERNO	AXE	BOLZEN	PIN	BULON
18	455007	1	SPINA 6X55 UNI 6873	GOUPILLE	STIFT	PIN	PASADOR
19	417202	2	ROSETTA 31X56 UNI 6592	RONDELLE	SCHEIBE	WASHER	ARANDELA
20	466295	1	SUPPORTO	SUPPORT	TRAEGER	SUPPORT	SOPORTE
21	136399	1	BOCCOLA	DOUILLE	BUCHSE	BUSHING	CASQUILLO
22	235012	1	GANCIO	CROCHET	HAKEN	HOOK	GANCHO
23	405030	1	PULEGGIA	POULIE	SCHEIBE	PULLEY	POLEA
24	380223	1	PERNO	AXE	BOLZEN	PIN	BULON
25	136590	2	DISTANZIALE	ENTRETOISE	DISTANZHULSE	SPACER	DISTANCIADOR
26	379204	1	PERNO	AXE	BOLZEN	PIN	BULON

BOZZELLO

* Poulie
* Line block
* Seilblock
* Poleas

TAV. SV.14.01

matr. G.A23.0001

PM 12524-25
PM 12524-25 S
PM 13524-25 SP

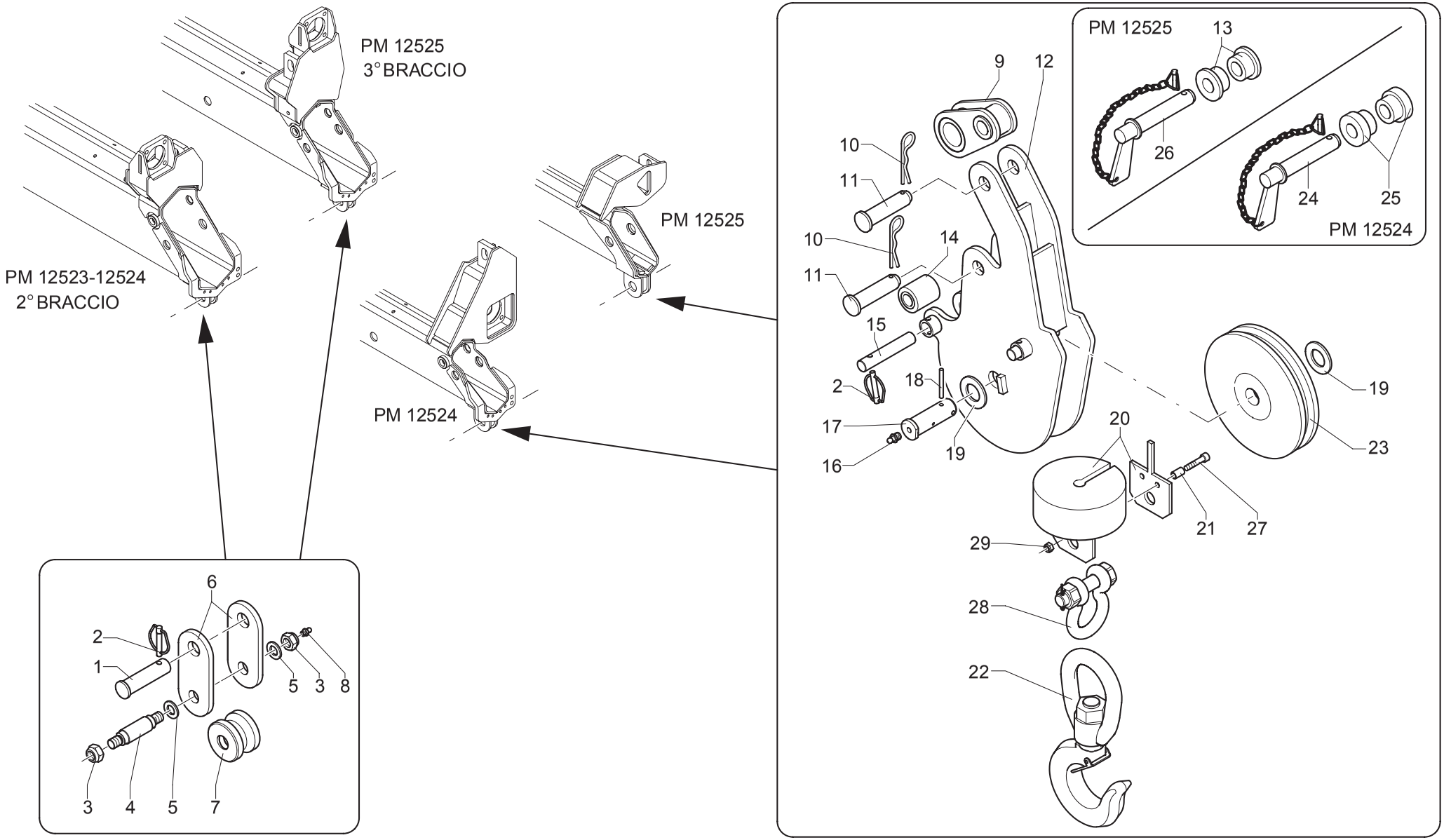

UNISTUDIO - Moder

POS.	N°CODICE	Q	DESCRIZIONE	DESIGNATION	BENENNUNG	DESCRIPTION	DENOMINACIONES
27	497135	2	VITE TCEI M8X40 UNI 5931 8.8	VIS	SCHRAUBE	SCREW	TORNILLO
28	235025	1	GANCIO	CROCHET	HAKEN	HOOK	GANCHO
29	191168	2	DADO M8 UNI 7474	ECROU	MUTTER	NUT	TUERCA

ATTACCO ROTATORE

** Attache rotator*
** Coupling rotator*
** Rotatorverbindung*
** Conexion rotator*

TAV. SV.15.01

matr. G.A23.0001

PM 12,5
PM 12,5 S
PM 13,5 SP

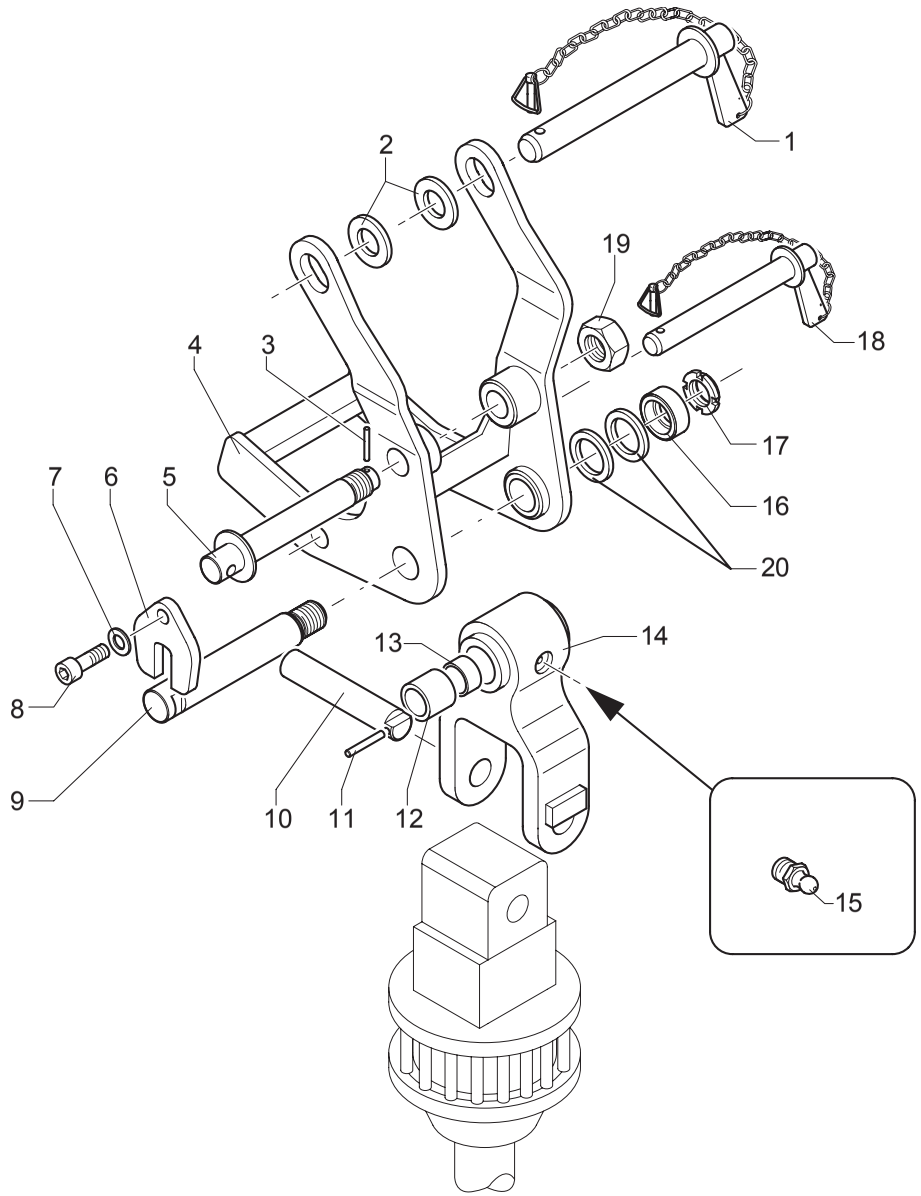

UNISTUDIO - Moder

POS.	N°CODICE	Q	DESCRIZIONE	DESIGNATION	BENENNUNG	DESCRIPTION	DENOMINACIONES
1	379772	1	PERNO	AXE	BOLZEN	PIN	BULON
2	136594	2	DISTANZIALE	ENTRETOISE	DISTANZHULSE	SPACER	DISTANCIADOR
3	177010	1	SPINA	GOUPILLE	STIFT	PIN	PASADOR
4	466578	1	SUPPORTO	SUPPORT	TRAEGER	SUPPORT	SOPORTE
5	380253	1	PERNO	AXE	BOLZEN	PIN	BULON
6	208079	1	FERMO	ARRET	SPERRUNG	RETAINER	TOPE
7	417027	1	RONDELLA SCHNORR S12 ZN	RONDELLE	SCHEIBE	WASHER	ARANDELA
8	497160	1	VITE TCEI M12X20 UNI 5931 8.8	VIS	SCHRAUBE	SCREW	TORNILLO
9	380072	1	PERNO	AXE	BOLZEN	PIN	BULON
10	380100	1	PERNO	AXE	BOLZEN	PIN	BULON
11	455221	1	SPINA 6X40 UNI 6873	GOUPILLE	STIFT	PIN	PASADOR
12	137296	2	BOCCOLA	DOUILLE	BUCHSE	BUSHING	CASQUILLO
13	136067	1	BOCCOLA	DOUILLE	BUCHSE	BUSHING	CASQUILLO
14	123182	1	ATTACCO	ATTACHE	VERBINDUNG	COUPLING	CONEXION
15	281004	1	INGRASSATORE	GRAISSEUR	SCHMIERER	GREASE FITTING	ENGRASADOR
16	135525	1	BOCCOLA	DOUILLE	BUCHSE	BUSHING	CASQUILLO
17	237015	1	GHIERA	FRETTE	NUTMUTTER	RING NUT	TUERCA
18	379176	1	PERNO	AXE	BOLZEN	PIN	BULON
19	191003	1	DADO M24 UNI 5588	ECROU	MUTTER	NUT	TUERCA
20	417212	2	ROSETTA 32 UNI 1750	RONDELLE	SCHEIBE	WASHER	ARANDELA

LIMITATORE DI ROTAZIONE

** Limiteur de rotation*
** Slewing control device*
** Rotationsbegrenzer*
** Limitador de rotación*

TAV. SW.01.01

matr. G.A23.0001

PM 12,5
PM 12,5 S
PM 13,5 SP

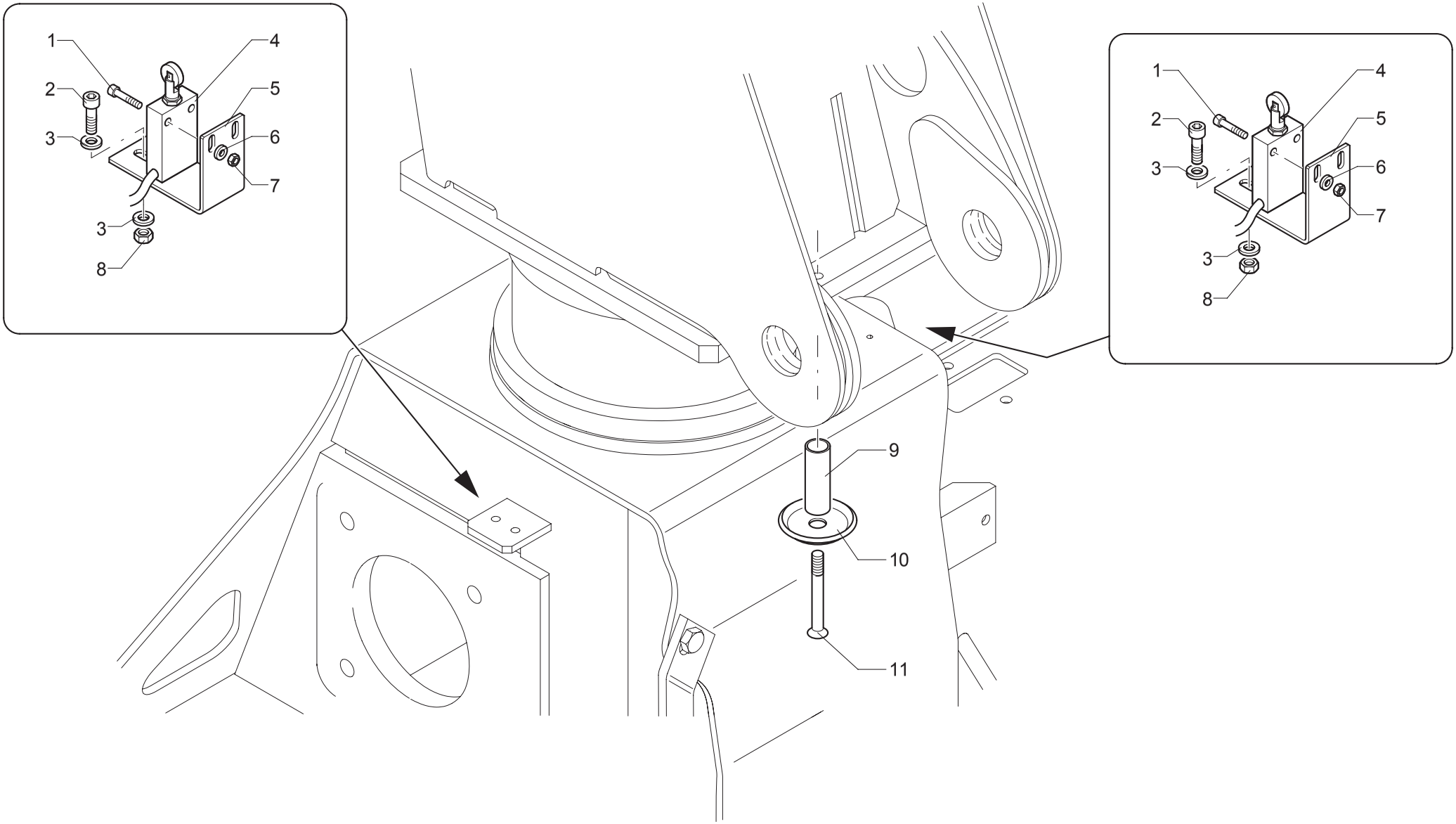

UNISTUDIO - Moder

POS.	N°CODICE	Q	DESCRIZIONE	DESIGNATION	BENENNUNG	DESCRIPTION	DENOMINACIONES
1	497835	4	VITE TCEI M4X20 UNI 5931 12.9	VIS	SCHRAUBE	SCREW	TORNILLO
2	497119	4	VITE TCEI M6X20 UNI 5931 8.8	VIS	SCHRAUBE	SCREW	TORNILLO
3	417003	8	ROSETTA 6,4X12,5 UNI 6592	RONDELLE	SCHEIBE	WASHER	ARANDELA
4	395474	2	MICROINTERRUTTORE	MICRO-INTERRUPTEUR	MIKROSCHALTER	MICRO-SWITCH	MICROINTERRUPTOR
5	293535	2	SUPPORTO	SUPPORT	TRAEGER	SUPPORT	SOPORTE
6	417001	4	ROSETTA 4,3X9 UNI 6592	RONDELLE	SCHEIBE	WASHER	ARANDELA
7	191032	4	DADO M4 UNI 5588	ECROU	MUTTER	NUT	TUERCA
8	191034	4	DADO M6 UNI 5588	ECROU	MUTTER	NUT	TUERCA
9	136630	1	DISTANZIALE	ENTRETOISE	DISTANZHULSE	SPACER	DISTANCIADOR
10	417143	1	RONDELLA	RONDELLE	SCHEIBE	WASHER	ARANDELA
11	497076	1	VITE TSPEI M8X70 UNI 5933 10.9	VIS	SCHRAUBE	SCREW	TORNILLO

SICUREZZA 3° PUNTO DI MANOVRA

** Sécurité pour 3ème point de manœuvre*
** Safety device for the 3rd manoeuvre position*
** Sicherung für 3. Manöverplatz*
** Dispositivo seguridad 3er punto de maniobra*

TAV. SW.02.01

matr. G.A23.0001

PM 12,5
PM 12,5 S

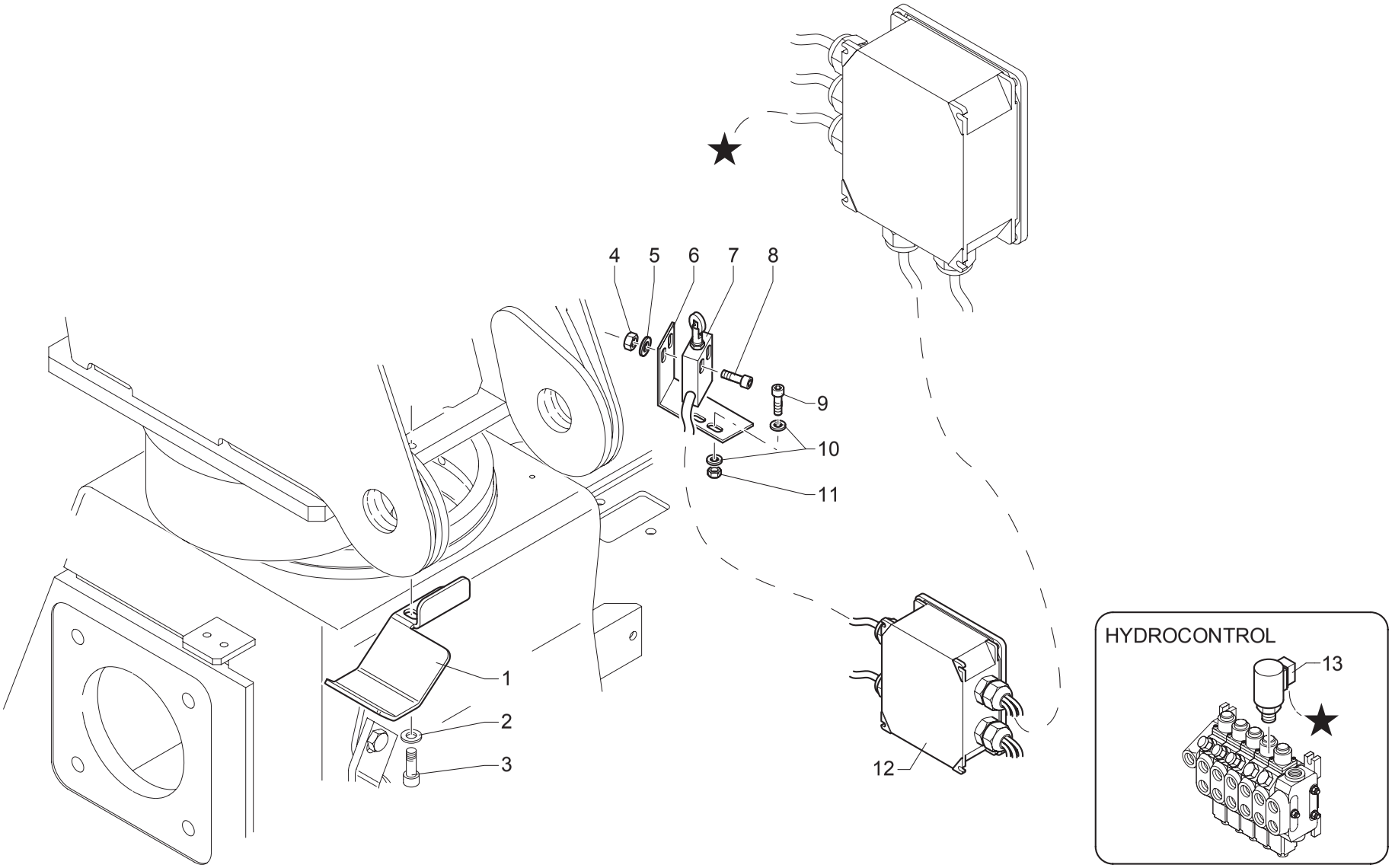

UNISTUDIO - Moder

POS.	N°CODICE	Q	DESCRIZIONE	DESIGNATION	BENENNUNG	DESCRIPTION	DENOMINACIONES
1	293625	1	PIATTO	ASSIETTE	TELLER	PLATE	PLACA
2	417025	1	RONDELLA SCHNORR S8 ZN	RONDELLE	SCHEIBE	WASHER	ARANDELA
3	497132	1	VITE TCEI M8X25 UNI 5931 8.8	VIS	SCHRAUBE	SCREW	TORNILLO
4	191032	2	DADO M4 UNI 5588	ECROU	MUTTER	NUT	TUERCA
5	417001	2	ROSETTA 4,3X9 UNI 6592	RONDELLE	SCHEIBE	WASHER	ARANDELA
6	466648	1	SUPPORTO	SUPPORT	TRAEGER	SUPPORT	SOPORTE
7	395474	1	MICROINTERRUTTORE	MICRO-INTERRUPTEUR	MIKROSCHALTER	MICRO-SWITCH	MICROINTERRUPTOR
8	497835	2	VITE TCEI M4X20 UNI 5931 12.9	VIS	SCHRAUBE	SCREW	TORNILLO
9	497119	2	VITE TCEI M6X20 UNI 5931 8.8	VIS	SCHRAUBE	SCREW	TORNILLO
10	417003	4	ROSETTA 6,4X12,5 UNI 6592	RONDELLE	SCHEIBE	WASHER	ARANDELA
11	191162	2	DADO M6 UNI 7473	ECROU	MUTTER	NUT	TUERCA
12	289600	1	SCATOLA	BOITE	GEHAUSE	BOX	CAJA
13	2000371	1	MICROINTERRUTTORE	MICRO-INTERRUPTEUR	MIKROSCHALTER	MICRO-SWITCH	MICROINTERRUPTOR

DISPOSITIVI DI SICUREZZA BHP

** Dispositifs de sécurité BHP*
** BHP safety devices*
** BHP Sicherheitsvorrichtungen*
** Dispositivos de seguridad BHP*

TAV. SW.03.01 1/2

matr. G.A23.0001

PM 12,5
PM 12,5 S

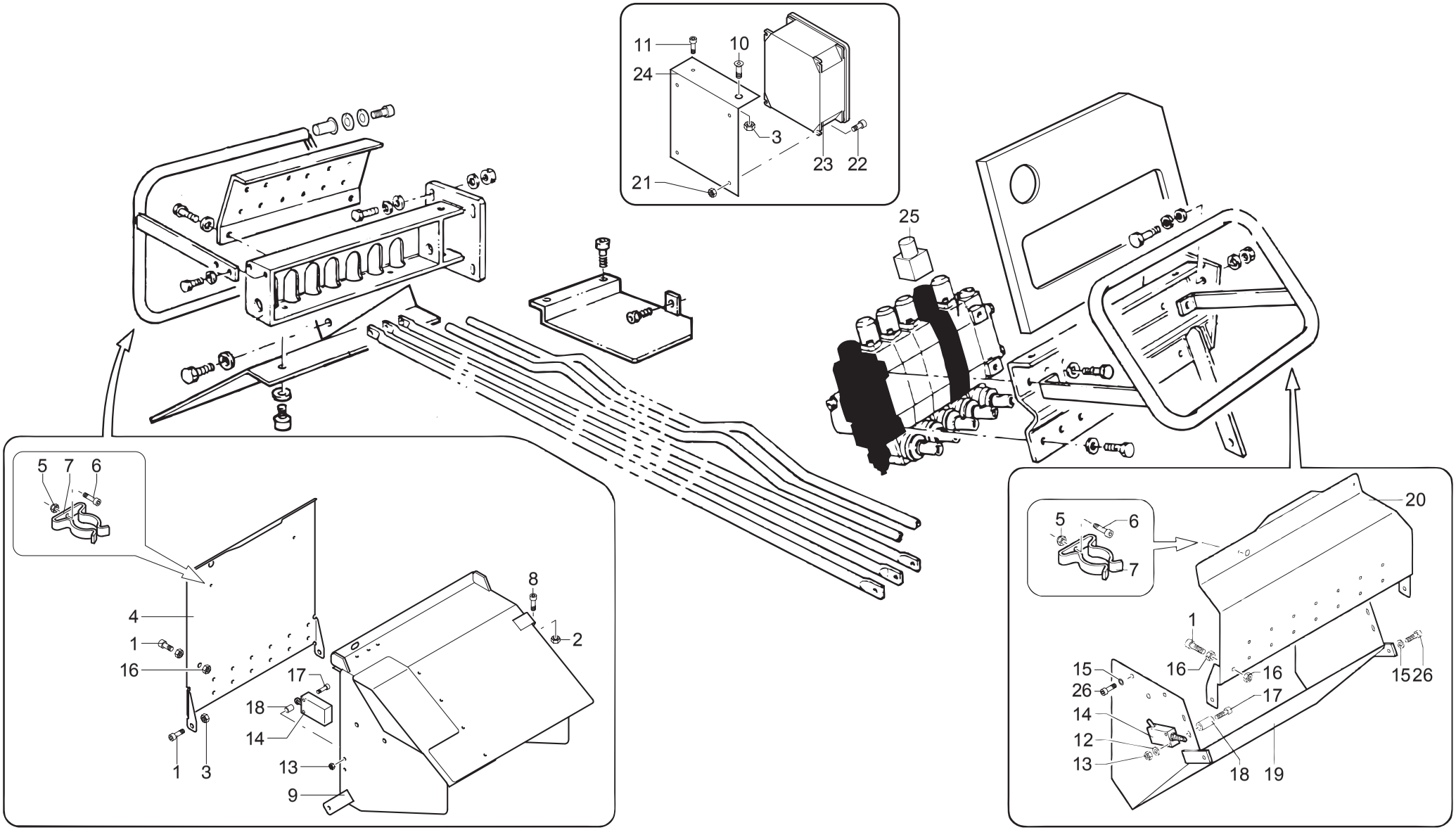

UNISTUDIO - Moder

POS.	N°CODICE	Q	DESCRIZIONE	DESIGNATION	BENENNUNG	DESCRIPTION	DENOMINACIONES
1	497120	4	VITE TCEI M6X25 UNI 5931 8.8	VIS	SCHRAUBE	SCREW	TORNILLO
2	191033	3	DADO M5 UNI 5588	ECROU	MUTTER	NUT	TUERCA
3	191125	4	DADO M6 UNI 7474	ECROU	MUTTER	NUT	TUERCA
4	176366	1	CARTER	CARTER	GEHAUSE	CASING	CARTER
5	191178	4	DADO M3 UNI 7473	ECROU	MUTTER	NUT	TUERCA
6	497271	4	VITE TCEI M3X10 UNI 5931 8.8	VIS	SCHRAUBE	SCREW	TORNILLO
7	349132	2	MOLLA	RESSORT	FEDER	SPRING	MUELLE
8	497110	3	VITE TCEI M5X12 UNI 5931 8.8	VIS	SCHRAUBE	SCREW	TORNILLO
9	176367	1	CARTER	CARTER	GEHAUSE	CASING	CARTER
10	497905	1	VITE TSPEI M6X20 UNI 5933 8.8	VIS	SCHRAUBE	SCREW	TORNILLO
11	497118	1	VITE TCEI M6X16 UNI 5931 8.8	VIS	SCHRAUBE	SCREW	TORNILLO
12	417003	6	ROSETTA 6,4X12,5 UNI 6592	RONDELLE	SCHEIBE	WASHER	ARANDELA
13	191032	4	DADO M4 UNI 5588	ECROU	MUTTER	NUT	TUERCA
14	395474	2	MICROINTERRUTTORE	MICRO-INTERRUPTEUR	MIKROSCHALTER	MICRO-SWITCH	MICROINTERRUPTOR
15	417024	6	RONDELLA SCHNORR S6 DACROMET	RONDELLE	SCHEIBE	WASHER	ARANDELA
16	191162	4	DADO M6 UNI 7473	ECROU	MUTTER	NUT	TUERCA
17	497344	2	VITE TCEI M4X30 UNI 5931 8.8	VIS	SCHRAUBE	SCREW	TORNILLO
18	136667	4	DISTANZIALE	ENTRETOISE	DISTANZHULSE	SPACER	DISTANCIADOR
19	176368	1	CARTER	CARTER	GEHAUSE	CASING	CARTER
20	176369	1	CARTER	CARTER	GEHAUSE	CASING	CARTER
21	191017	4	DADO M5 UNI 7473	ECROU	MUTTER	NUT	TUERCA
22	497111	4	VITE TCEI M5X16 UNI 5931 8.8	VIS	SCHRAUBE	SCREW	TORNILLO
23	280417	1	SCATOLA	BOITE	GEHAUSE	BOX	CAJA
24	466675	1	SUPPORTO	SUPPORT	TRAEGER	SUPPORT	SOPORTE
25	200371	1	MICROINTERRUTTORE	MICRO-INTERRUPTEUR	MIKROSCHALTER	MICRO-SWITCH	MICROINTERRUPTOR
26	497225	6	VITE TCEI M6X12 UNI 5931 8.8	VIS	SCHRAUBE	SCREW	TORNILLO

DISPOSITIVI DI SICUREZZA BHP

** Dispositifs de sécurité BHP*
** BHP safety devices*
** BHP Sicherheitsvorrichtungen*
** Dispositivos de seguridad BHP*

TAV. SW.03.01 2/2

matr. G.A23.0001

PM 12,5
PM 12,5 S

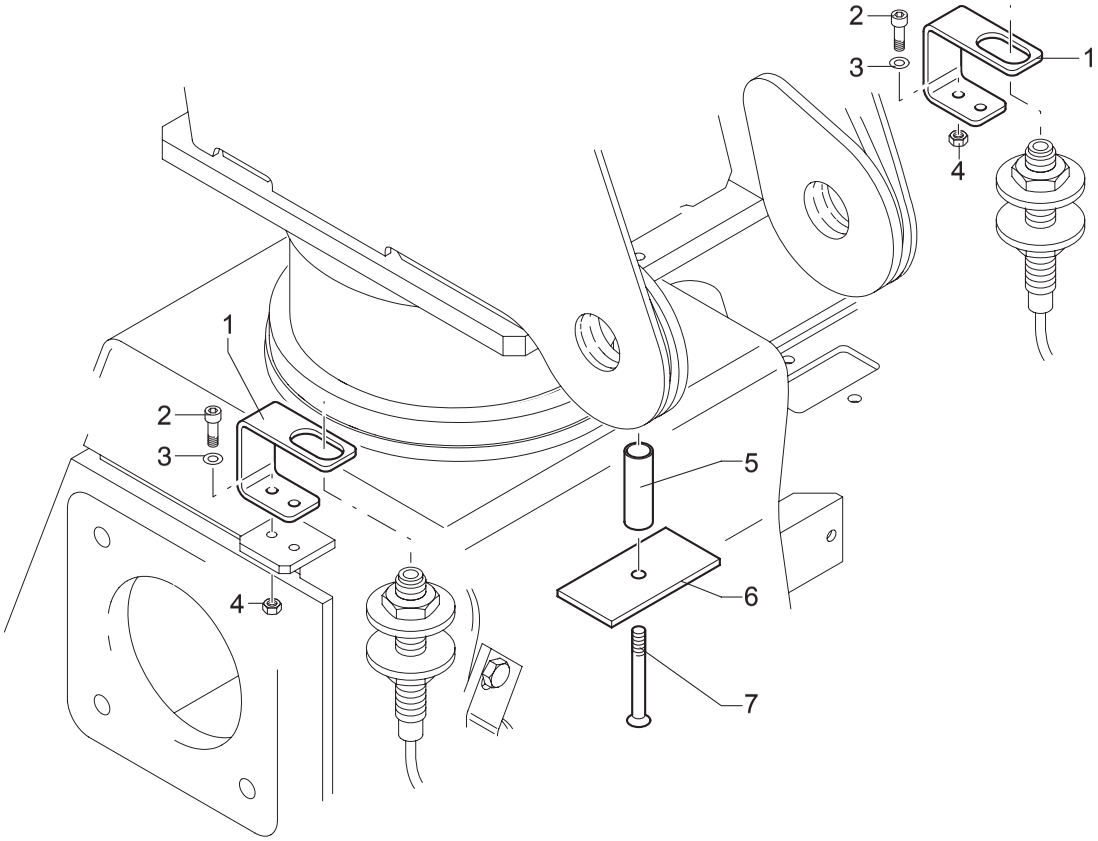

UN01-R-0874-00-F-D-01

POS.	N°CODICE	Q	DESCRIZIONE	DESIGNATION	BENENNUNG	DESCRIPTION	DENOMINACIONES
1	467226	2	SUPPORTO	SUPPORT	TRAEGER	SUPPORT	SOPORTE
2	497119	4	VITE TCEI M6X20 UNI 5931 8.8	VIS	SCHRAUBE	SCREW	TORNILLO
3	417024	4	RONDELLA SCHNORR S6 DACROMET	RONDELLE	SCHEIBE	WASHER	ARANDELA
4	191125	4	DADO M6 UNI 7474	ECROU	MUTTER	NUT	TUERCA
5	136630	1	DISTANZIALE	ENTRETOISE	DISTANZHULSE	SPACER	DISTANCIADOR
6	467227	1	SUPPORTO	SUPPORT	TRAEGER	SUPPORT	SOPORTE
7	497076	1	VITE TSPEI M8X70 UNI 5933 10.9	VIS	SCHRAUBE	SCREW	TORNILLO

COMANDO EMERGENZA IDRAULICO

** Commande dispositif d'urgence hydraulique*
** Hydraulic emergency device control*
** Not-Aus-Vorrichtung Steuerung-hydraulik*
** Dispositivo de emergencia hydraulico*

TAV. SX.01.01

matr. G.A23.0001

PM 12,5
PM 12,5 S

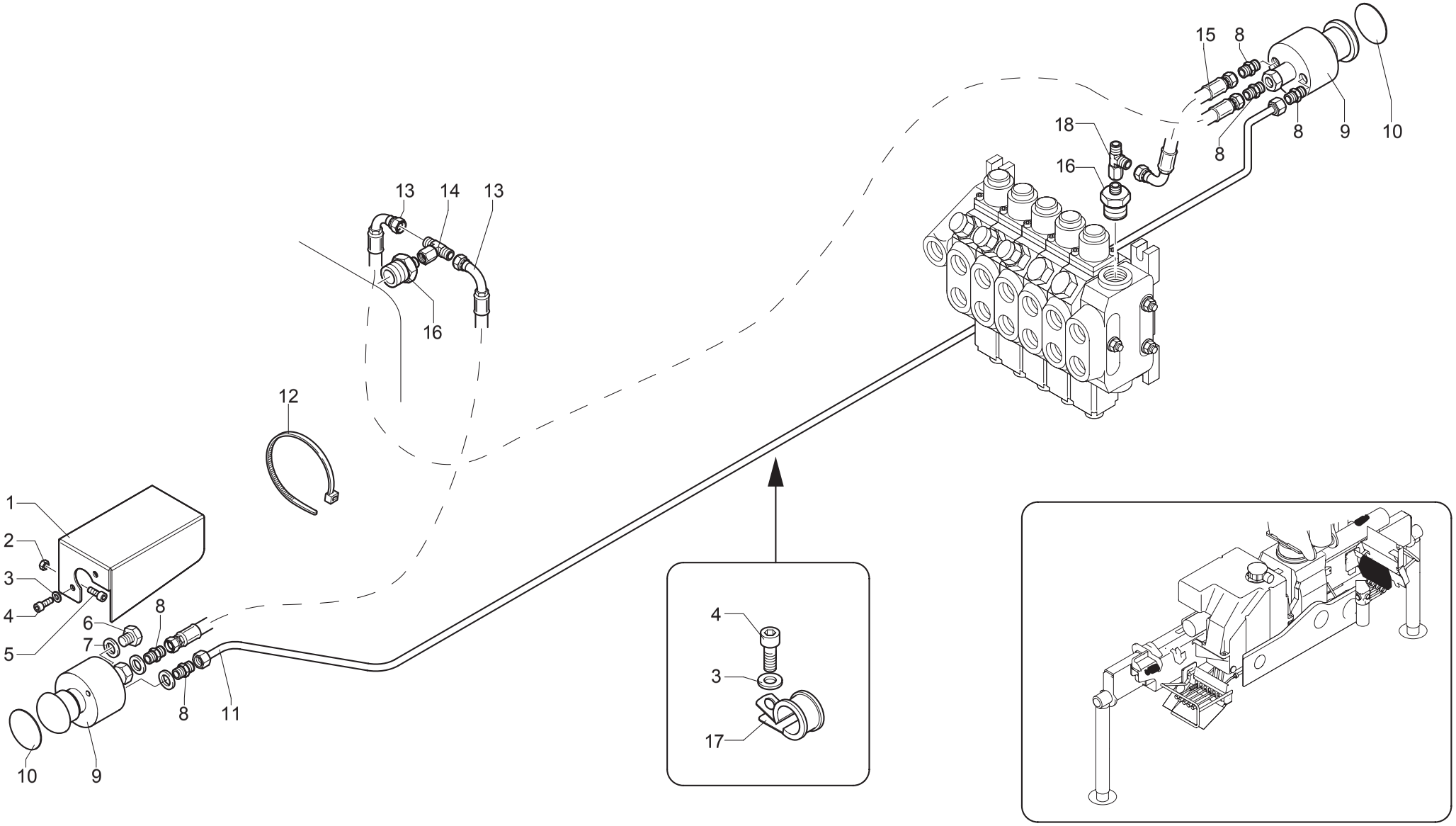

UNISTUDIO - Moder

POS.	N°CODICE	Q	DESCRIZIONE	DESIGNATION	BENENNUNG	DESCRIPTION	DENOMINACIONES
1	466214	1	SUPPORTO	SUPPORT	TRAEGER	SUPPORT	SOPORTE
2	191162	2	DADO M6 UNI 7473	ECROU	MUTTER	NUT	TUERCA
3	417050	5	RONDELLA SCHNORR S5 ZN	RONDELLE	SCHEIBE	WASHER	ARANDELA
4	497109	5	VITE TCEI M5X10 UNI 5931 8.8	VIS	SCHRAUBE	SCREW	TORNILLO
5	497119	2	VITE TCEI M6X20 UNI 5931 8.8	VIS	SCHRAUBE	SCREW	TORNILLO
6	471179	1	TAPPO	BOUCHON	VERSCHLUSS	CAP	TAPON
7	417011	1	RONDELLA DOWTY B S PP45-A	RONDELLE	SCHEIBE	WASHER	ARANDELA
8	409421	5	RACCORDO	RACCORD	FITTING	FITTING	RACOR
9	421007	2	VALVOLA	SOUPAPE	VENTIL	VALVE	VALVULA
10	472622	2	TARGHETTA	AUTOCOLLANTS	SCHILD	DECAL	ETIQUETA
11	493351	1	TUBO IN FERRO	TUYAU EN FER	EISEN-ROHR	IRON PIPE	TUBO DE HIERRO
12	207023	10	FASCETTA	COLLIER	HALTEBAND	CLAMP	ABRAZADERA
13	486258	2	TUBO IN GOMMA	TUYAU FLEX.	SCHLAUCH	HOSE	LATIGUILLO
14	409437	1	RACCORDO	RACCORD	FITTING	FITTING	RACOR
15	486875	1	TUBO IN GOMMA	TUYAU FLEX.	SCHLAUCH	HOSE	LATIGUILLO
16	409426	2	RACCORDO	RACCORD	FITTING	FITTING	RACOR
17	353049	2	MORSETTO	ARRETOIR	KLEMME	FASTENING UNIT	CONEXION
18	409442	1	RACCORDO	RACCORD	FITTING	FITTING	RACOR

COMANDO EMERGENZA ELETTRICO MACCHINA BASE

** Commande dispositif d'urgence électrique - grue standard*
** Not-Aus-Vorrichtung Steuerung-elektrik - Standardkran*
** Electric emergency device control basic crane*
** Dispositivo de emergencia electrico grua base*

TAV. SX.01.02

matr. G.A23.0001

PM 12,5
PM 12,5 S
PM 13,5 SP

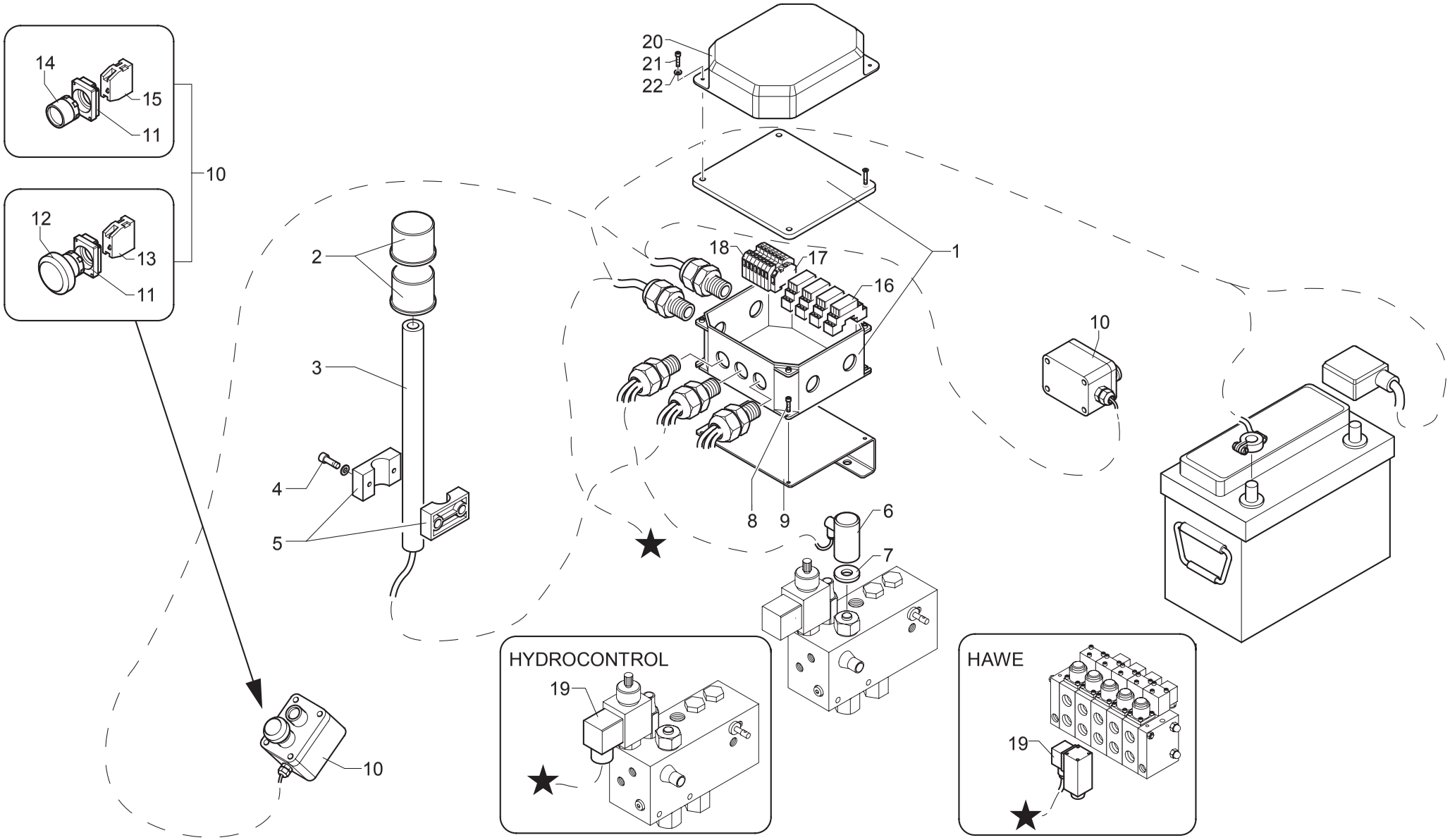

UNISTUDIO - Moder

POS.	N°CODICE	Q	DESCRIZIONE	DESIGNATION	BENENNUNG	DESCRIPTION	DENOMINACIONES
1	289537	1	SCATOLA	BOITE	GEHAUSE	BOX	CAJA
2	289541	1	LAMPEGGIATORE	CLIGNOTANT	BLINKGEBER	FLASHER	RELAMPAGUEANTE
3	466627	1	SUPPORTO	SUPPORT	TRAEGER	SUPPORT	SOPORTE
4	497121	2	VITE TCEI M6X30 UNI 5931 8.8	VIS	SCHRAUBE	SCREW	TORNILLO
5	353087	1	MORSETTO	ARRETOIR	KLEMME	FASTENING UNIT	CONEXION
6	395590	1	PRESSOSTATO - 100% GRU	PRESSOSTAT - 100% GRUE	DRUCKMESSER - 100% KRAN	PRESSURE SWITCH - 100% CRANE	PRESOSTATO - 100% GRUA
7	417096	1	RONDELLA DOWTY B S PP45-B	RONDELLE	SCHEIBE	WASHER	ARANDELA
8	497110	4	VITE TCEI M5X12 UNI 5931 8.8	VIS	SCHRAUBE	SCREW	TORNILLO
9	466620	1	SUPPORTO	SUPPORT	TRAEGER	SUPPORT	SOPORTE
10	289568	2	KIT SCATOLA	KIT BOITE	GEHAUSE SATZ	BOX KIT	KIT CAJA
11	395599	4	FLANGIA	BRIDE	FLANSCH	FLANGE	BRIDA
12	395628	2	PULSANTE	POUSSOIR	DRUCKKNOPF	PUSH-BUTTON	PULSADOR
13	395601	2	CONTATTO	CONTACT	KONTAKT	CONTACT	CONTACTO
14	395629	2	PULSANTE	POUSSOIR	DRUCKKNOPF	PUSH-BUTTON	PULSADOR
15	395600	2	CONTATTO	CONTACT	KONTAKT	CONTACT	CONTACTO
16	395615	2	RELE’	RELAIS	RELAIS	RELAY	RELE’
17	395609	1	FUSIBILE	FUSIBLE	SCHMELZ-EINSATZ	FUSE	FUSIBLE
18	395620	11	MORSETTO	ARRETOIR	KLEMME	FASTENING UNIT	CONEXION
19	395612	1	CONNETTORE	CONNECTEUR	VERBINDER	CONNECTOR	CONECTOR
20	176247	1	CARTER	CARTER	GEHAUSE	CASING	CARTER
21	497111	2	VITE TCEI M5X16 UNI 5931 8.8	VIS	SCHRAUBE	SCREW	TORNILLO
22	417002	2	ROSETTA 5,3X10 UNI 6592	RONDELLE	SCHEIBE	WASHER	ARANDELA

COMANDO EMERGENZA ELETTRICO MACCHINA CON VERRICELLO

** Commande dispositif d'urgence électrique - grue avec treuil*
** Electric emergency device control - crane with winch*
** Not-Aus-Vorrichtung Steuerung-elektrik - Kran mit Winde*
** Dispositivo de emergencia electrico - grua con cabrestante*

TAV. SX.01.03 1/2

matr. G.A23.0001

PM 12,5
PM 12,5 S
PM 13,5 SP

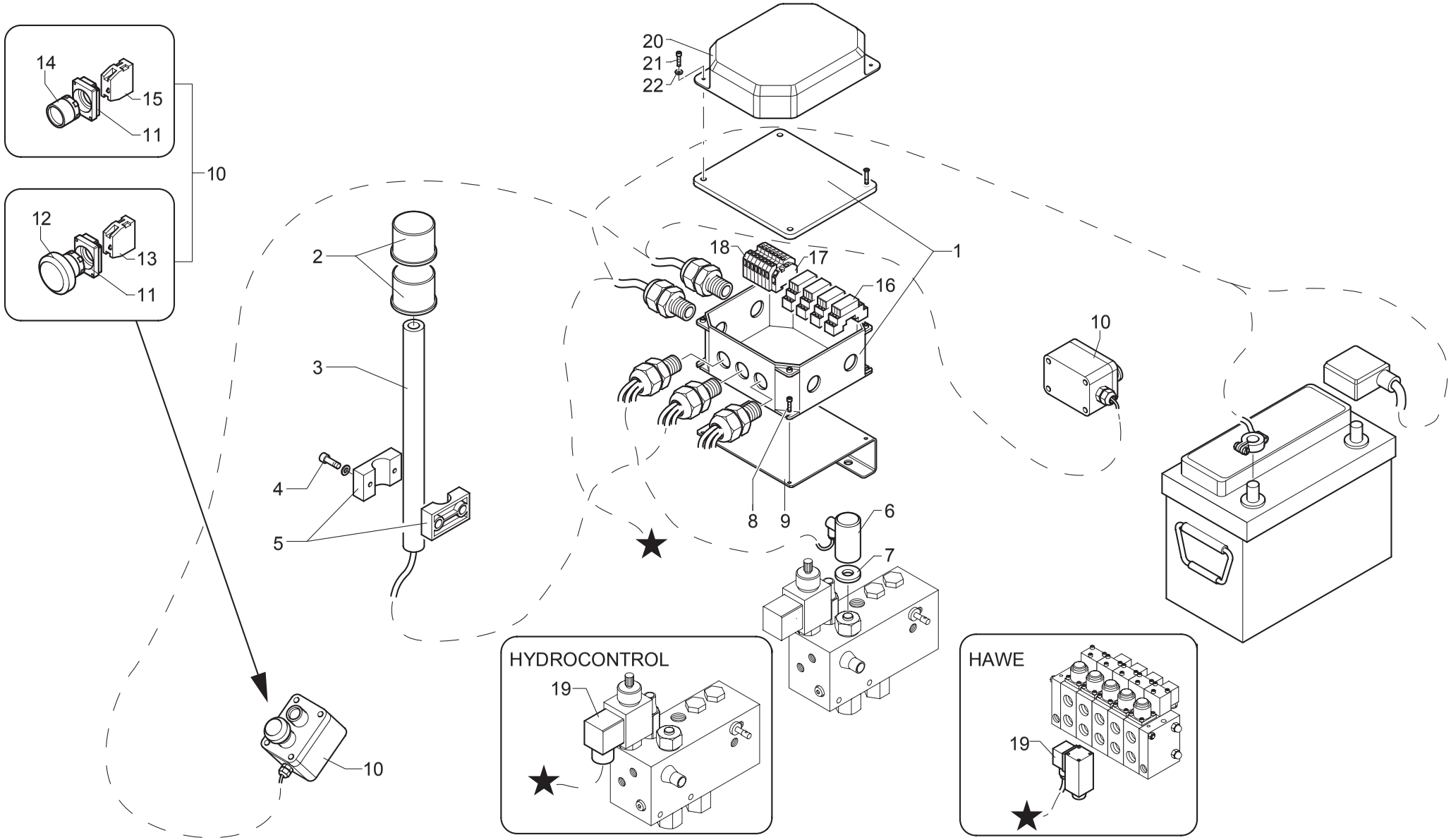

UNISTUDIO - Moder

POS.	N°CODICE	Q	DESCRIZIONE	DESIGNATION	BENENNUNG	DESCRIPTION	DENOMINACIONES
1	289538	1	SCATOLA	BOITE	GEHAUSE	BOX	CAJA
2	289541	1	LAMPEGGIATORE	CLIGNOTANT	BLINKGEBER	FLASHER	RELAMPAGUEANTE
3	466627	1	SUPPORTO	SUPPORT	TRAEGER	SUPPORT	SOPORTE
4	497121	2	VITE TCEI M6X30 UNI 5931 8.8	VIS	SCHRAUBE	SCREW	TORNILLO
5	353087	1	MORSETTO	ARRETOIR	KLEMME	FASTENING UNIT	CONEXION
6	395590	1	PRESSOSTATO - 100% GRU	PRESSOSTAT - 100% GRUE	DRUCKMESSER - 100% KRAN	PRESSURE SWITCH - 100% CRANE	PRESOSTATO - 100% GRUA
7	417096	1	RONDELLA DOWTY B S PP45-B	RONDELLE	SCHEIBE	WASHER	ARANDELA
8	497110	4	VITE TCEI M5X12 UNI 5931 8.8	VIS	SCHRAUBE	SCREW	TORNILLO
9	466620	1	SUPPORTO	SUPPORT	TRAEGER	SUPPORT	SOPORTE
10	289568	2	KIT SCATOLA	KIT BOITE	GEHAUSE SATZ	BOX KIT	KIT CAJA
11	395599	4	FLANGIA	BRIDE	FLANSCH	FLANGE	BRIDA
12	395628	2	PULSANTE	POUSSOIR	DRUCKKNOPF	PUSH-BUTTON	PULSADOR
13	395601	2	CONTATTO	CONTACT	KONTAKT	CONTACT	CONTACTO
14	395629	2	PULSANTE	POUSSOIR	DRUCKKNOPF	PUSH-BUTTON	PULSADOR
15	395600	2	CONTATTO	CONTACT	KONTAKT	CONTACT	CONTACTO
16	395615	2	RELE’	RELAIS	RELAIS	RELAY	RELE’
17	395609	1	FUSIBILE	FUSIBLE	SCHMELZ-EINSATZ	FUSE	FUSIBLE
18	395620	11	MORSETTO	ARRETOIR	KLEMME	FASTENING UNIT	CONEXION
19	395612	1	CONNETTORE	CONNECTEUR	VERBINDER	CONNECTOR	CONECTOR
20	176247	1	CARTER	CARTER	GEHAUSE	CASING	CARTER
21	497111	2	VITE TCEI M5X16 UNI 5931 8.8	VIS	SCHRAUBE	SCREW	TORNILLO
22	417002	2	ROSETTA 5,3X10 UNI 6592	RONDELLE	SCHEIBE	WASHER	ARANDELA

COMANDO EMERGENZA ELETTRICO MACCHINA CON VERRICELLO

** Commande dispositif d'urgence électrique - grue avec treuil*
** Electric emergency device control - crane with winch*
** Not-Aus-Vorrichtung Steuerung-elektrik - Kran mit Winde*
** Dispositivo de emergencia electrico - grua con cabrestante*

TAV. SX.01.03 2/2

matr. G.A23.0001

PM 12,5
PM 12,5 S
PM 13,5 SP

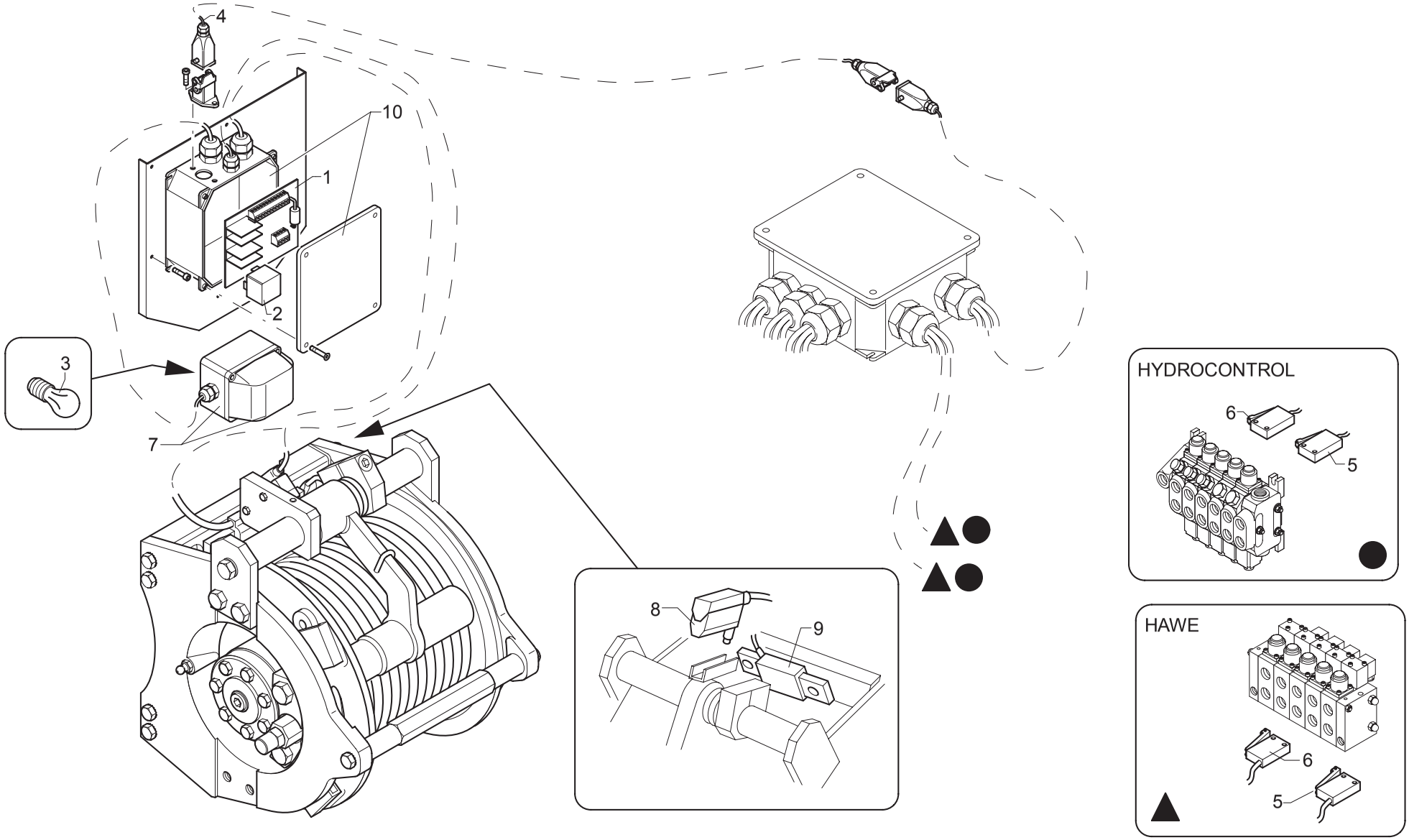

POS.	N°CODICE	Q	DESCRIZIONE	DESIGNATION	BENENNUNG	DESCRIPTION	DENOMINACIONES
1	476031	1	SCHEDA	FICHE	KARTE	CARD	FICHA
2	395320	1	RELE' (12V)	RELAIS	RELAIS	RELAY	RELE'
2	395350	1	RELE' (24V)	RELAIS	RELAIS	RELAY	RELE'
3	395468	1	LAMPADA (12V)	LAMPE	LAMPE	LAMP	LAMPARA
3	395222	1	LAMPADA (24V)	LAMPE	LAMPE	LAMP	LAMPARA
4	289543	1	KIT CAVO PROLUNGA	KIT CABLE RALLONGE	VERLANGERUNGSKABELSATZ	EXTENSION CORD KIT	CABLE DE PROLONGACION
5	200371	1	MICROINTER. (DISTR. HYDROCONTROL)	MICRO-INTERRUPTEUR	MIKROSCHALTER	MICRO-SWITCH	MICROINTERRUPTOR
5	435117	1	MICROINTERRUTTORE (DISTR. HAWE)	MICRO-INTERRUPTEUR	MIKROSCHALTER	MICRO-SWITCH	MICROINTERRUPTOR
6	200410	1	MICROINTER. (DISTR. HYDROCONTROL)	MICRO-INTERRUPTEUR	MIKROSCHALTER	MICRO-SWITCH	MICROINTERRUPTOR
6	435118	1	MICROINTERRUTTORE (DISTR. HAWE)	MICRO-INTERRUPTEUR	MIKROSCHALTER	MICRO-SWITCH	MICROINTERRUPTOR
7	395315	1	LAMPADA	LAMPE	LAMPE	LAMP	LAMPARA
8	395466	1	TRASDUTTORE	TRANDUCTEUR	GEBER	ENCODER	TRANSDUCTOR
9	199297	1	MICROINTERRUTTORE	MICRO-INTERRUPTEUR	MIKROSCHALTER	MICRO-SWITCH	MICROINTERRUPTOR
10	289536	1	SCATOLA	BOITE	GEHAUSE	BOX	CAJA

COM. EMERGENZA ELETTRICO CON 3° PUNTO DI MANOVRA

** Commande arrêt d'urgence électrique avec 3ème point de manœuvre* ** Elektrische Notsteuerung mit 3. Manöverplatz*

** Electrical emergency control for the 3rd manoeuvre position* ** Mando emergencia eléctrico con 3er punto de maniobra*

TAV. SX.04.01

matr. G.A23.0001

PM 12,5
PM 12,5 S

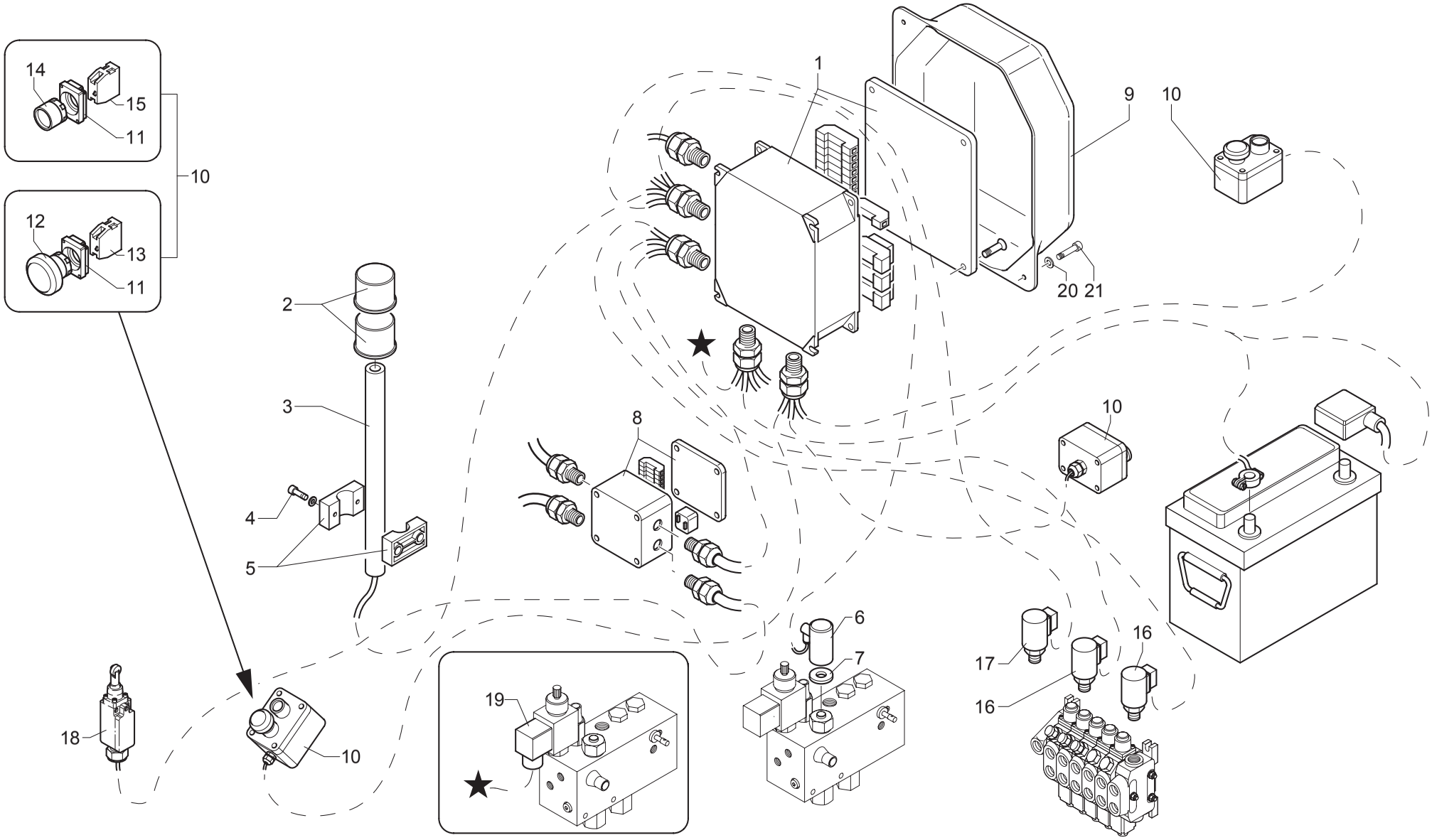

UNISTUDIO - Moder

POS.	N°CODICE	Q	DESCRIZIONE	DESIGNATION	BENENNUNG	DESCRIPTION	DENOMINACIONES
1	289539	1	SCATOLA	BOITE	GEHAUSE	BOX	CAJA
2	289541	1	LAMPEGGIATORE	CLIGNOTANT	BLINKGEBER	FLASHER	RELAMPAGUEANTE
3	466627	1	SUPPORTO	SUPPORT	TRAEGER	SUPPORT	SOPORTE
4	497121	2	VITE TCEI M6X30 UNI 5931 8.8	VIS	SCHRAUBE	SCREW	TORNILLO
5	353087	1	MORSETTO	ARRETOIR	KLEMME	FASTENING UNIT	CONEXION
6	395590	1	PRESSOSTATO - 100% GRU	PRESSOSTAT - 100% GRUE	DRUCKMESSER - 100% KRAN	PRESSURE SWITCH - 100% CRANE	PRESOSTATO - 100% GRUA
7	417096	1	RONDELLA DOWTY B S PP45-B	RONDELLE	SCHEIBE	WASHER	ARANDELA
8	289600	1	SCATOLA	BOITE	GEHAUSE	BOX	CAJA
9	176247	1	CARTER	CARTER	GEHAUSE	CASING	CARTER
10	289568	3	KIT SCATOLA	KIT BOITE	GEHAUSE SATZ	BOX KIT	KIT CAJA
11	395599	6	FLANGIA	BRIDE	FLANSCH	FLANGE	BRIDA
12	395628	3	PULSANTE	POUSSOIR	DRUCKKNOPF	PUSH-BUTTON	PULSADOR
13	395601	3	CONTATTO	CONTACT	KONTAKT	CONTACT	CONTACTO
14	395629	3	PULSANTE	POUSSOIR	DRUCKKNOPF	PUSH-BUTTON	PULSADOR
15	395600	3	CONTATTO	CONTACT	KONTAKT	CONTACT	CONTACTO
16	200371	2	PRESSOSTATO	PRESSOSTAT	DRUCKMESSER	PRESSURE SWITCH	PRESOSTATO
17	200410	1	PRESSOSTATO	PRESSOSTAT	DRUCKMESSER	PRESSURE SWITCH	PRESOSTATO
18	395458	1	MICROINTERRUTTORE	MICRO-INTERRUPTEUR	MIKROSCHALTER	MICRO-SWITCH	MICROINTERRUPTOR
19	395612	1	CONNETTORE	CONNECTEUR	VERBINDER	CONNECTOR	CONECTOR
20	417002	2	ROSETTA 5,3X10 UNI 6592	RONDELLE	SCHEIBE	WASHER	ARANDELA
21	497111	2	VITE TCEI M5X16 UNI 5931 8.8	VIS	SCHRAUBE	SCREW	TORNILLO

COMPL. IMPIANTO ELETTRICO CON RADIOCOMANDO

** Compl. circuit életrique avec radiocommande*
** Compl. electric system with radio control*
** Ergänzung Elektrikanlage mit Fernsteuerung*
** Complet. grupo electrico con radiomando*

TAV. SX.05.01

matr. G.A23.0001

PM 12,5
PM 12,5 S
PM 13,5 SP

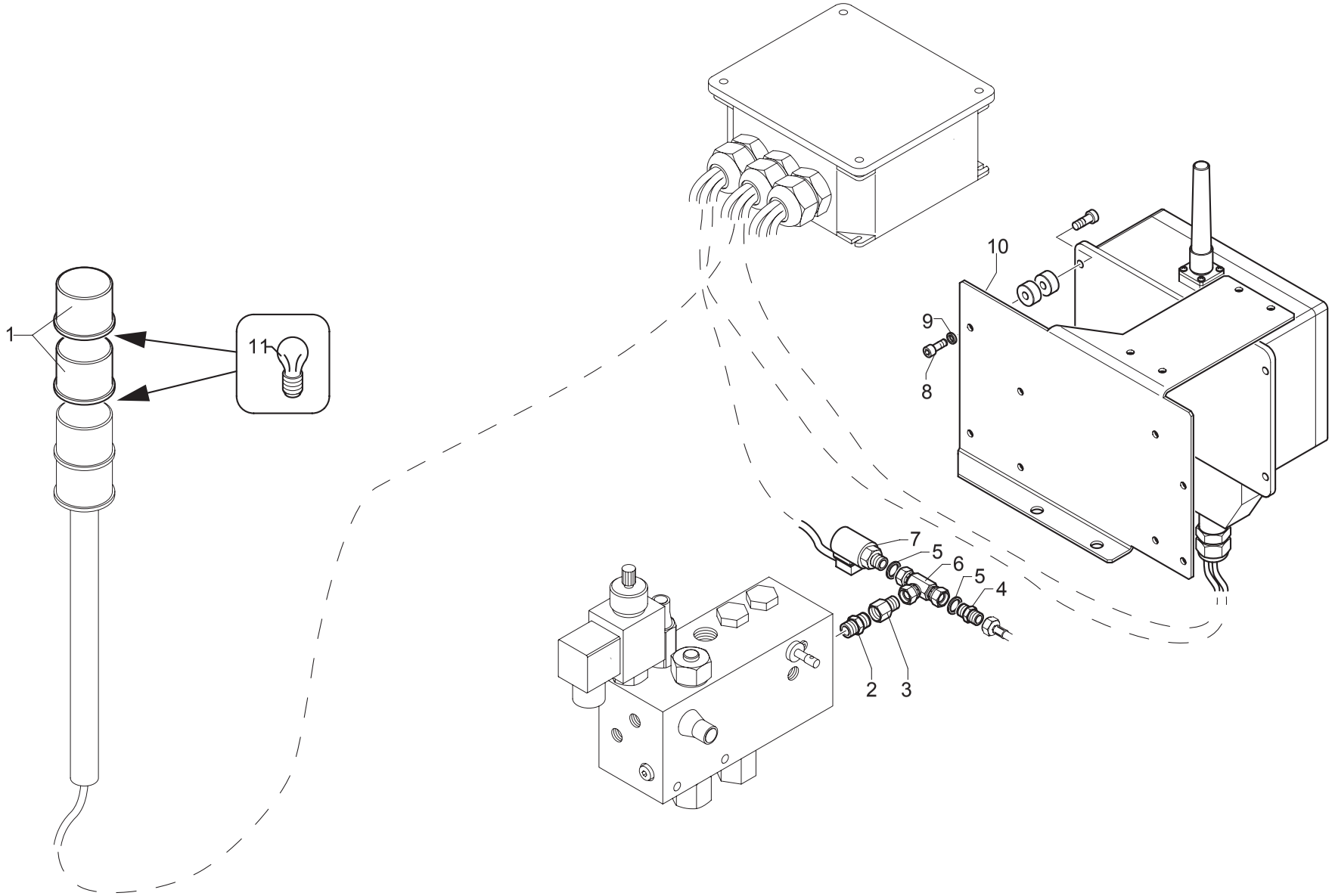

UNISTUDIO - Moder

POS.	N°CODICE	Q	DESCRIZIONE	DESIGNATION	BENENNUNG	DESCRIPTION	DENOMINACIONES
1	289540	1	LAMPEGGIATORE	CLIGNOTANT	BLINKGEBER	FLASHER	RELAMPAGUEANTE
2	409250	1	RACCORDO	RACCORD	FITTING	FITTING	RACOR
3	409289	1	RACCORDO	RACCORD	FITTING	FITTING	RACOR
4	409675	1	RACCORDO	RACCORD	FITTING	FITTING	RACOR
5	417096	2	RONDELLA DOWTY B S PP45-B	RONDELLE	SCHEIBE	WASHER	ARANDELA
6	409074	1	RACCORDO	RACCORD	FITTING	FITTING	RACOR
7	395589	1	PRESSOSTATO - 90% GRU	PRESSOSTAT - 90% GRUE	DRUCKMESSER - 90% KRAN	PRESSURE SWITCH - 90% CRANE	PRESOSTATO - 90% GRUA
8	497117	4	VITE TCEI M6X10 UNI 5931 8.8	VIS	SCHRAUBE	SCREW	TORNILLO
9	417024	4	RONDELLA SCHNORR S6 DACROMET	RONDELLE	SCHEIBE	WASHER	ARANDELA
10	466619	1	SUPPORTO	SUPPORT	TRAEGER	SUPPORT	SOPORTE
11	319016	2	LAMPADINA (12V)	AMPOULE	GLUEHBIRNE	BULB	LAMPARITA
11	319015	2	LAMPADINA (24V)	AMPOULE	GLUEHBIRNE	BULB	LAMPARITA

COMPL. IMPIANTO ELETTRICO CON LIMITATORE DI ROTAZIONE

** Compl. circuit életrique avec limiteur de rotation*
** Compl. electric system with slewing control device*
** Ergänzung Elektrikanlage mit Rotationsbegrenzer*
** Complet. grupo electrico con limitador de rotación*

TAV. SX.06.01

matr. G.A23.0001

PM 12,5
PM 12,5 S
PM 13,5 SP

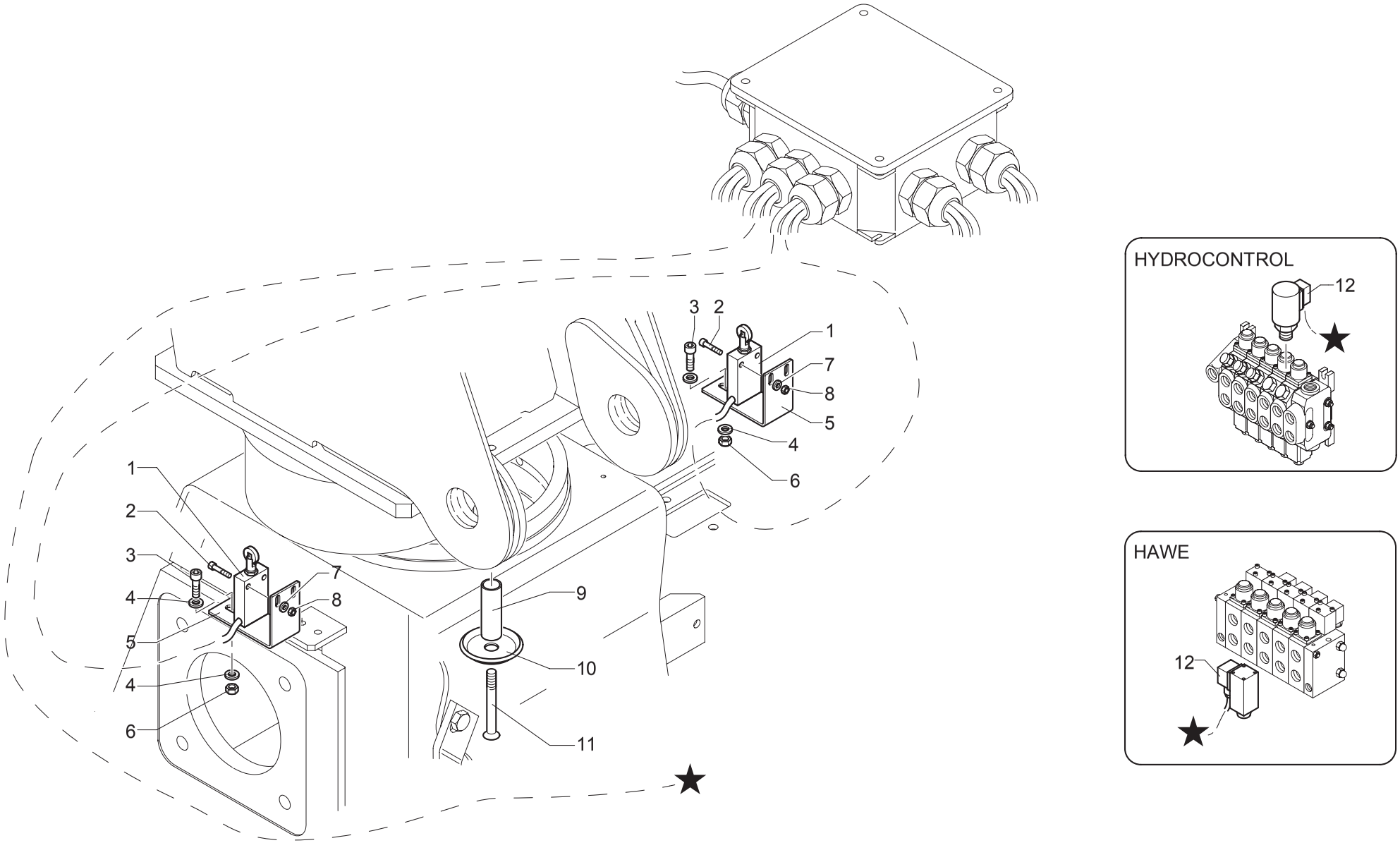

UNISTUDIO - Moder

POS.	N°CODICE	Q	DESCRIZIONE	DESIGNATION	BENENNUNG	DESCRIPTION	DENOMINACIONES
1	395474	2	MICROINTERRUTTORE	MICRO-INTERRUPTEUR	MIKROSCHALTER	MICRO-SWITCH	MICROINTERRUPTOR
2	497835	4	VITE TCEI M4X20 UNI 5931 12.9	VIS	SCHRAUBE	SCREW	TORNILLO
3	497119	4	VITE TCEI M6X20 UNI 5931 8.8	VIS	SCHRAUBE	SCREW	TORNILLO
4	417003	8	ROSETTA 6,4X12,5 UNI 6592	RONDELLE	SCHEIBE	WASHER	ARANDELA
5	293535	2	SUPPORTO	SUPPORT	TRAEGER	SUPPORT	SOPORTE
6	191034	4	DADO M6 UNI 5588	ECROU	MUTTER	NUT	TUERCA
7	417001	4	ROSETTA 4,3X9 UNI 6592	RONDELLE	SCHEIBE	WASHER	ARANDELA
8	191032	4	DADO M4 UNI 5588	ECROU	MUTTER	NUT	TUERCA
9	136630	1	DISTANZIALE	ENTRETOISE	DISTANZHULSE	SPACER	DISTANCIADOR
10	417143	1	RONDELLA	RONDELLE	SCHEIBE	WASHER	ARANDELA
11	497076	1	VITE TSPEI M8X70 UNI 5933 10.9	VIS	SCHRAUBE	SCREW	TORNILLO
12	200371	1	MICROINTER. (DISTR. HYDROCONTROL)	MICRO-INTERRUPTEUR	MIKROSCHALTER	MICRO-SWITCH	MICROINTERRUPTOR
12	435117	1	MICROINTERRUTTORE (DISTR. HAWE)	MICRO-INTERRUPTEUR	MIKROSCHALTER	MICRO-SWITCH	MICROINTERRUPTOR

COMPL. IMP. ELETT. CON LIMITATORE DI ROTAZIONE PER 3° PUNTO DI MANOVRA

** Compl. inst. électrique avec limiteur di rotation pour 3ème point de manœuvre*
** Vervollständigung elektrische Anlage mit Rotationsbegrenzer für 3. Manöverplatz*
** Electrical equipment with rotation control device for the 3rd manoeuvre position*
** Completar sistema eléctrico con limitador de rotación para 3er punto de maniobra*

TAV. SX.06.02

matr. G.A23.0001

PM 12,5
PM 12,5 S

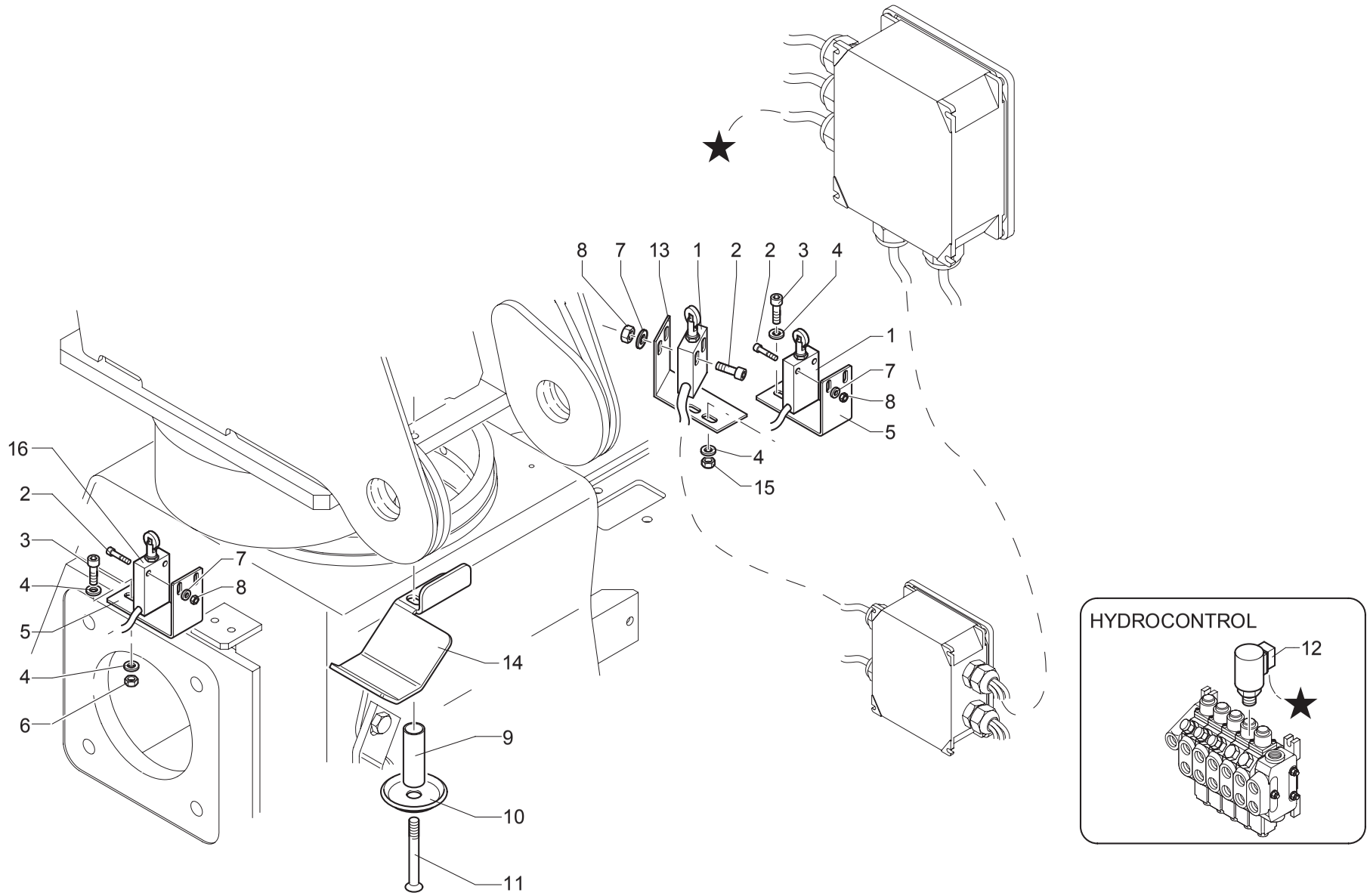

UNISTUDIO - Moder

POS.	N°CODICE	Q	DESCRIZIONE	DESIGNATION	BENENNUNG	DESCRIPTION	DENOMINACIONES
1	395474	2	MICROINTERRUTTORE	MICRO-INTERRUPTEUR	MIKROSCHALTER	MICRO-SWITCH	MICROINTERRUPTOR
2	497835	6	VITE TCEI M4X20 UNI 5931 12.9	VIS	SCHRAUBE	SCREW	TORNILLO
3	497119	4	VITE TCEI M6X20 UNI 5931 8.8	VIS	SCHRAUBE	SCREW	TORNILLO
4	417003	8	ROSETTA 6,4X12,5 UNI 6592	RONDELLE	SCHEIBE	WASHER	ARANDELA
5	293535	2	SUPPORTO	SUPPORT	TRAEGER	SUPPORT	SOPORTE
6	191034	2	DADO M6 UNI 5588	ECROU	MUTTER	NUT	TUERCA
7	417001	6	ROSETTA 4,3X9 UNI 6592	RONDELLE	SCHEIBE	WASHER	ARANDELA
8	191032	6	DADO M4 UNI 5588	ECROU	MUTTER	NUT	TUERCA
9	136630	1	DISTANZIALE	ENTRETOISE	DISTANZHULSE	SPACER	DISTANCIADOR
10	417143	1	RONDELLA	RONDELLE	SCHEIBE	WASHER	ARANDELA
11	497076	1	VITE TSPEI M8X70 UNI 5933 10.9	VIS	SCHRAUBE	SCREW	TORNILLO
12	200371	1	MICROINTER. (DISTR. HYDROCONTROL)	MICRO-INTERRUPTEUR	MIKROSCHALTER	MICRO-SWITCH	MICROINTERRUPTOR
13	466648	1	SUPPORTO	SUPPORT	TRAEGER	SUPPORT	SOPORTE
14	293625	1	PIATTO	ASSIETTE	TELLER	PLATE	PLACA
15	191162	2	DADO M6 UNI 7473	ECROU	MUTTER	NUT	TUERCA
16	395635	1	MICROINTERRUTTORE	MICRO-INTERRUPTEUR	MIKROSCHALTER	MICRO-SWITCH	MICROINTERRUPTOR

SCAMBIATORE DI CALORE

** Echangeur de chaleur*
** Heat exchanger*
** Waermeaustauscher*
** Intercamb. de calor*

TAV. SX.07.01

matr. G.A23.0001

PM 12,5
PM 12,5 S
PM 13,5 SP

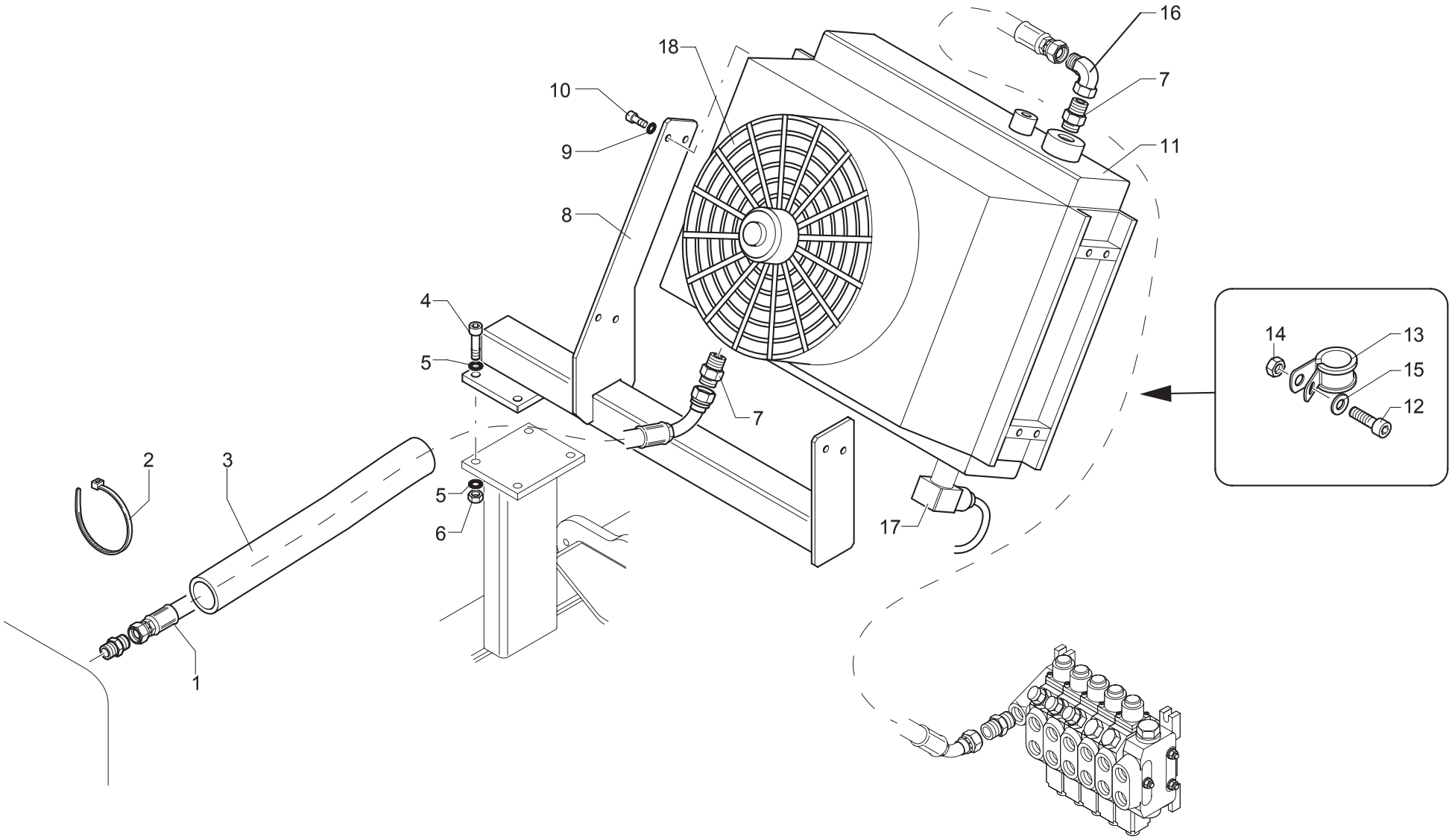

UNISTUDIO - Moder

POS.	N°CODICE	Q	DESCRIZIONE	DESIGNATION	BENENNUNG	DESCRIPTION	DENOMINACIONES
1	485807	1	TUBO IN GOMMA	TUYAU FLEX.	SCHLAUCH	HOSE	LATIGUILLO
2	207025	2	FASCETTA	COLLIER	HALTEBAND	CLAMP	ABRAZADERA
3	276063	1	GUAINA	GAINE	MANTEL	SHEATH	MANGERA
4	497148	4	VITE TCEI M10X40 UNI 5931 8.8	VIS	SCHRAUBE	SCREW	TORNILLO
5	417026	8	RONDELLA SCHNORR S10 DACROMET	RONDELLE	SCHEIBE	WASHER	ARANDELA
6	191036	4	DADO M10 UNI 5588	ECROU	MUTTER	NUT	TUERCA
7	409474	2	RACCORDO	RACCORD	FITTING	FITTING	RACOR
8	466622	1	SUPPORTO	SUPPORT	TRAEGER	SUPPORT	SOPORTE
9	417025	6	RONDELLA SCHNORR S8 ZN	RONDELLE	SCHEIBE	WASHER	ARANDELA
10	497131	6	VITE TCEI M8X20 UNI 5931 8.8	VIS	SCHRAUBE	SCREW	TORNILLO
11	618385	1	SCAMBIATORE DI CALORE (12 V)	ECHANGEUR DE CHALEUR	WAERMEAUSTAUSCHER	HEAT EXCHANGER	INTERCAMB. DE CALOR
11	618382	1	SCAMBIATORE DI CALORE (24 V)	ECHANGEUR DE CHALEUR	WAERMEAUSTAUSCHER	HEAT EXCHANGER	INTERCAMB. DE CALOR
12	497114	1	VITE TCEI M5X30 UNI 5931 8.8	VIS	SCHRAUBE	SCREW	TORNILLO
13	353110	1	MORSETTO	ARRETOIR	KLEMME	FASTENING UNIT	CONEXION
14	191017	1	DADO M5 UNI 7473	ECROU	MUTTER	NUT	TUERCA
15	417002	1	ROSETTA 5,3X10 UNI 6592	RONDELLE	SCHEIBE	WASHER	ARANDELA
16	409475	1	RACCORDO	RACCORD	FITTING	FITTING	RACOR
17	15205	1	TERMOSTATO	THERMOSTAT	THERMOSTAT	THERMOSTAT	TERMOSTATO
18	15307	1	VENTOLA (12V)	HELICE	LUFTERRAD	FAN	HELICE
18	15285	1	VENTOLA (24V)	HELICE	LUFTERRAD	FAN	HELICE

IMP. ELETTRICO CON SCAMBIATORE DI CALORE

** Circuit életrique avec echangeur de chaleur*
** Electric system with heat exchanger*
** Elektrikanlage mit Waermeaustauscher*
** Grupo electrico con intercamb. de calor*

TAV. SX.08.01

matr. G.A23.0001

PM 12,5
PM 12,5 S
PM 13,5 SP

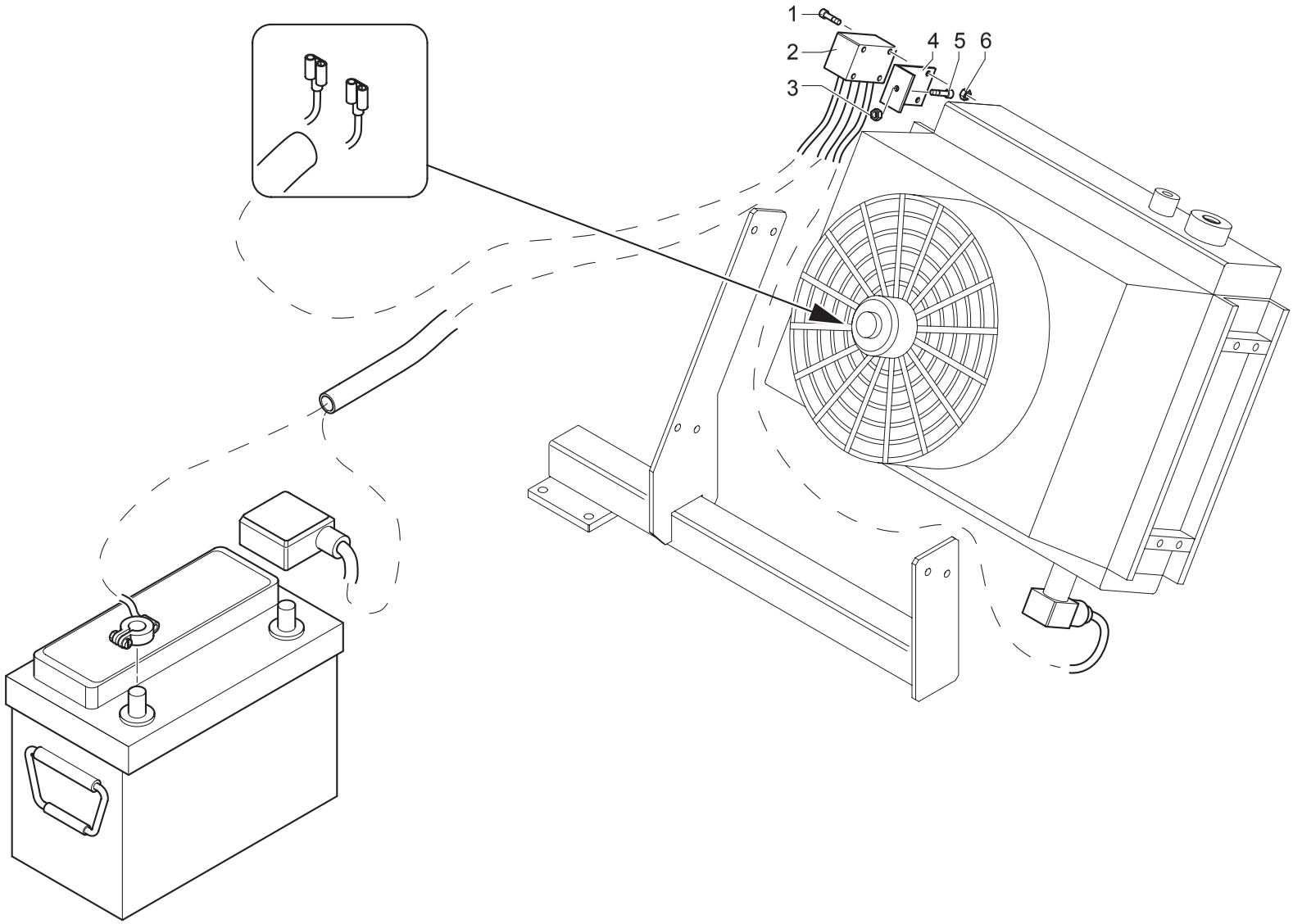

POS.	N°CODICE	Q	DESCRIZIONE	DESIGNATION	BENENNUNG	DESCRIPTION	DENOMINACIONES
1	497107	4	VITE TCEI M4X16 UNI 5931 8.8	VIS	SCHRAUBE	SCREW	TORNILLO
2	476050	1	DISPOSITIVO ACCENSIONE	DISPOSITIF D'ALLUMAGE	EINSCHALTVORRICHTUNG	IGNITION DEVICE	DISPOS. DE ARRANQUE
3	191034	1	DADO M6 UNI 5588	ECROU	MUTTER	NUT	TUERCA
4	466504	1	SUPPORTO	SUPPORT	TRAEGER	SUPPORT	SOPORTE
5	497119	1	VITE TCEI M6X20 UNI 5931 8.8	VIS	SCHRAUBE	SCREW	TORNILLO
6	191032	4	DADO M4 UNI 5588	ECROU	MUTTER	NUT	TUERCA

RADIOCOMANDO HTR 6F CE STD/INV “270130”

** Radiocommande*
** Radio control*
** Funksteuerung*
** Radiocontrol*

TAV. SY.01.01

matr. G.A23.0001

PM 12,5
PM 12,5 S
PM 13,5 SP

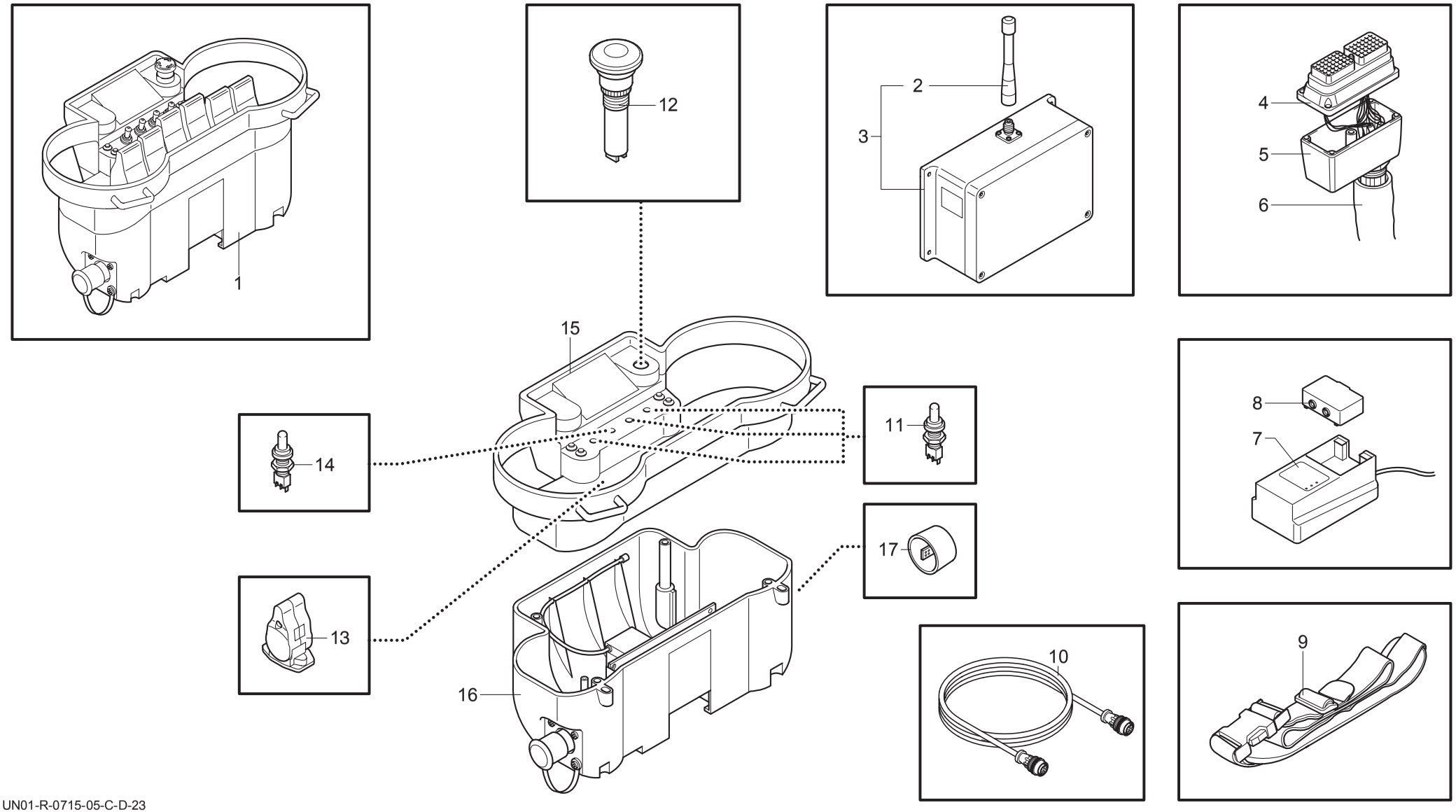

UN01-R-0715-05-C-D-23

POS.	N°CODICE	Q	DESCRIZIONE	DESIGNATION	BENENNUNG	DESCRIPTION	DENOMINACIONES
1	510820	1	UNITA' TRASMITTENTE	UNITE EMETTRICE	SENDEREINHEIT	TRANSMITTER UNIT	UNIDAD TRANSMISORA
2	510530	1	ANTENNA	ANTENNE	ANTENNE	ANTENNA	ANTENA
3	510819	1	UNITA' RICEVENTE	UNITE RECEPTRICE	EMPFANGSEINHEIT	RECEIVER UNIT	UNIDAD RECEPTORA
4	510813	1	CONNETTORE	CONNECTEUR	VERBINDER	CONNECTOR	CONECTOR
5	510814	1	CORPO CONNETTORE	CORPS CONNECTEUR	VERBINDERGEHAUSE	CONNECTOR BODY	CUERPO CONECTOR
6	510821	1	CAVO	CABLE	KABEL	CABLE	CABLE
7	510567	1	CARICABATTERIA	CHARGEUR BATTERIE	BATTERIELADEGERÄT	BATTERY CHARGER	CARGADOR BATERIA
8	510687	1	BATTERIA	BATTERIE	BATTERIE	BATTERY	BATERIA
9	510804	1	CINGHIA	COURROIE	RIEMEN	BELT	CORREA
10	510815	1	CAVO	CABLE	KABEL	CABLE	CABLE
11	510803	1	SELETTORE	SELECTEUR	WAHLSCHALTER	SELECTOR	SELECTOR
12	510552	1	PULSANTE	BOUTON	TASTE	BUTTON	BOTON
13	510739	1	LEVA	LEVIER	HEBEL	LEVER	PALANCA
14	510906	1	SELETTORE	SELECTEUR	WAHLSCHALTER	SELECTOR	SELECTOR
15	510907	1	COPERCHIO	COUVERCLE	DECKEL	COVER	TAPA
16	510908	1	COPERCHIO	COUVERCLE	DECKEL	COVER	TAPA
17	510752	1	CHIAVE	CLE	SCHLÜSSEL	KEY	LLAVE

RADIOCOMANDO SCANRECO 6F 12 V COM. STD “470375”

** Radiocommande*
** Radio control*
** Funksteuerung*
** Radiocontrol*

TAV. SY.02.01

matr. G.A23.0001

PM 12,5
PM 12,5 S
PM 13,5 SP

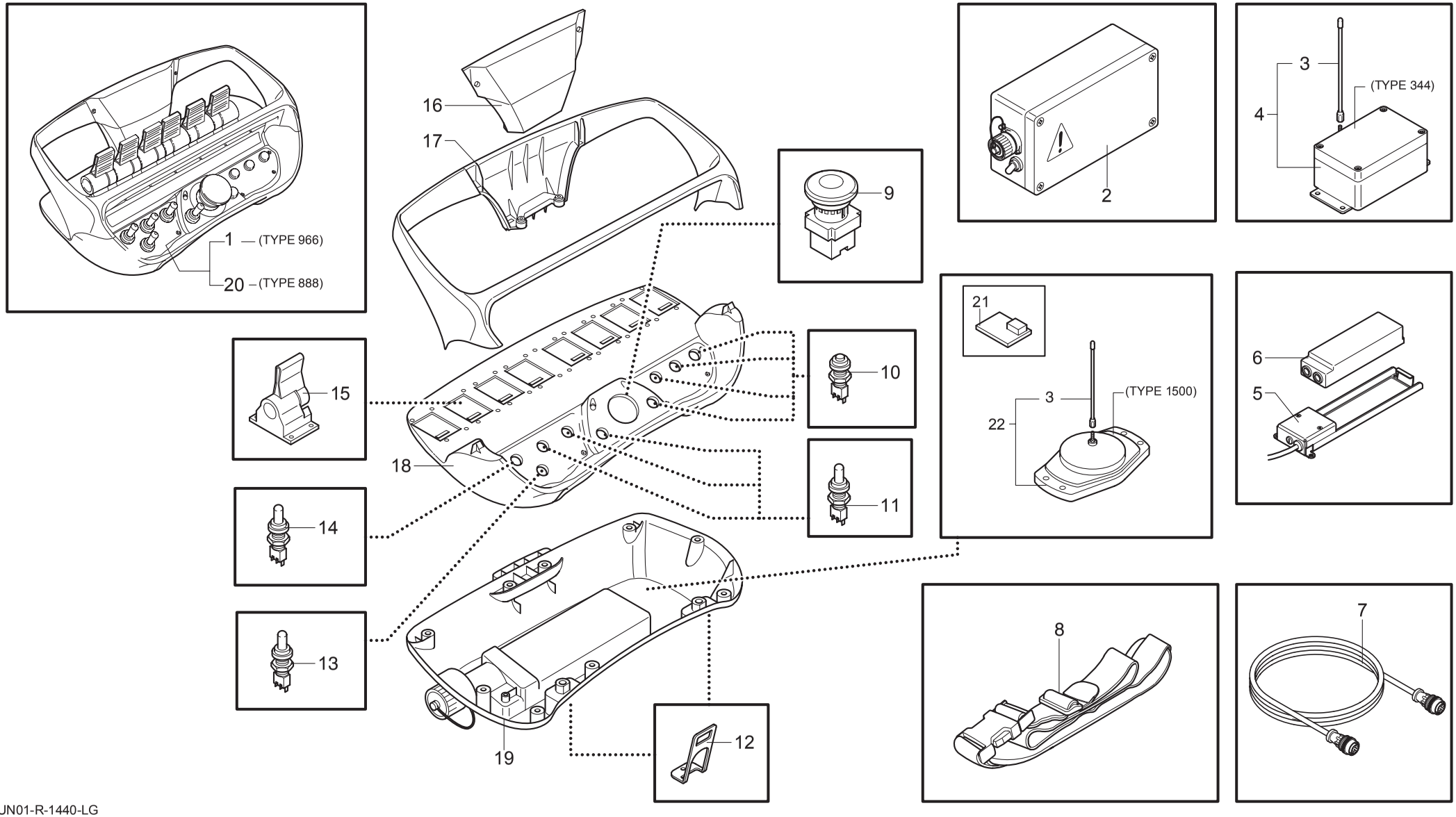

UN01-R-1440-LG

UNISTUDIO - Moder

POS.	N°CODICE	Q	DESCRIZIONE	DESIGNATION	BENENNUNG	DESCRIPTION	DENOMINACIONES
1	510575	1	UNITA' TRASMITTENTE	UNITE EMETTRICE	SENDEREINHEIT	TRANSMITTER UNIT	UNIDAD TRANSMISORA
2	510770	1	UNITA' CENTRALE	UNITE CENTRALE	ZENTRALEINHEIT	CENTRAL UNIT	UNIDAD CENTRAL
3	510587	1	ANTENNA	ANTENNE	ANTENNE	ANTENNA	ANTENA
4	510579	1	UNITA' RICEVENTE	UNITE RECEPTRICE	EMPFANGSEINHEIT	RECEIVER UNIT	UNIDAD RECEPTORA
5	510581	1	CARICABATTERIA	CHARGEUR BATTERIE	BATTERIELADEGERÄT	BATTERY CHARGER	CARGADOR BATERIA
6	510582	1	BATTERIA	BATTERIE	BATTERIE	BATTERY	BATERIA
7	510580	1	CAVO	CABLE	KABEL	CABLE	CABLE
8	510755	1	CINGHIA	COURROIE	RIEMEN	BELT	CORREA
9	510585	1	PULSANTE	BOUTON	TASTE	BUTTON	BOTON
10	510885	1	PULSANTE	BOUTON	TASTE	BUTTON	BOTON
11	510756	1	INTERRUTTORE	INTERRUPTEUR	SCHALTER	SWITCH	INTERRUPTOR
12	510890	1	GANCIO	CROCHET	HAKEN	HOOK	GANCHO
13	510883	1	INTERRUTTORE	INTERRUPTEUR	SCHALTER	SWITCH	INTERRUPTOR
14	510884	1	INTERRUTTORE	INTERRUPTEUR	SCHALTER	SWITCH	INTERRUPTOR
15	510586	1	LEVA	LEVIER	HEBEL	LEVER	PALANCA
16	510874	1	COPERCHIO	COUVERCLE	DECKEL	COVER	TAPA
17	510882	1	COPERCHIO	COUVERCLE	DECKEL	COVER	TAPA
18	510881	1	COPERCHIO	COUVERCLE	DECKEL	COVER	TAPA
19	510850	1	CORPO RADIOCOMANDO	CORPS RADIOCOMMANDE	FUNKSTEUERUNGGEHÄUSE	RADIO CONTROL BODY	CUERPO RADIOCONTROL
20	510948	1	UNITA' TRASMITTENTE	UNITE EMETTRICE	SENDEREINHEIT	TRANSMITTER UNIT	UNIDAD TRANSMISORA
21	510949	1	SCHEDA	FICHE	KARTE	BOARD	ESQUELA
22	510923	1	UNITA' RICEVENTE	UNITE RECEPTRICE	EMPFANGSEINHEIT	RECEIVER UNIT	UNIDAD RECEPTORA

RADIOCOMANDO SCANRECO 6F "HAWE" “397003”

* Radiocommande
* Radio control
* Funksteuerung
* Radiocontrol

TAV. SY.02.01A

matr. G.A23.0001

PM 12,5
PM 12,5 S
PM 13,5 SP

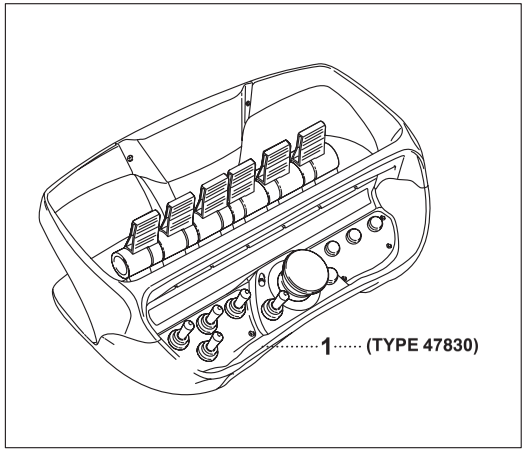

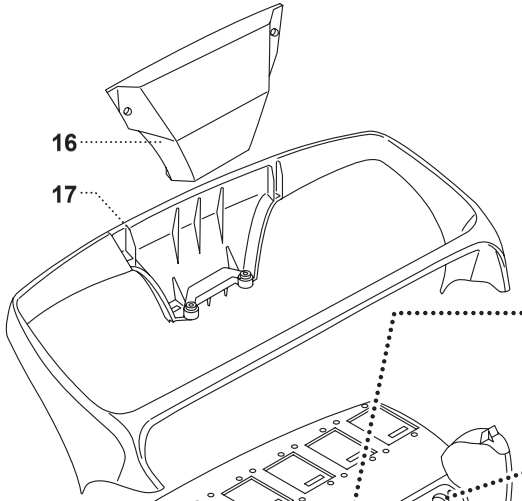

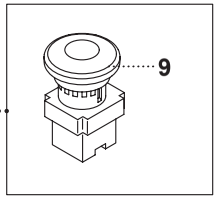

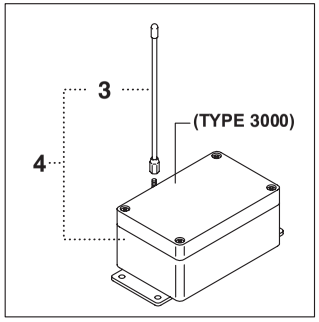

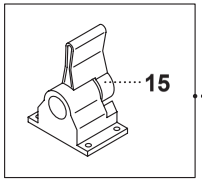

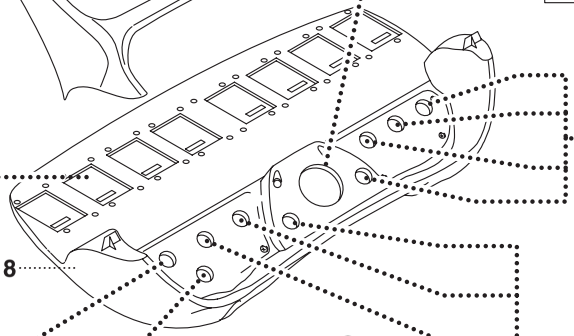

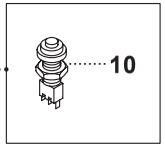

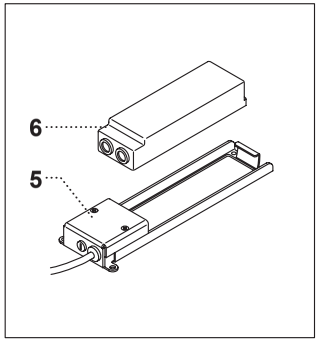

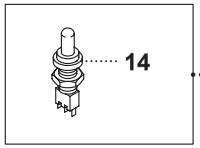

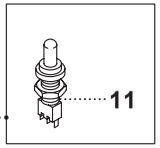

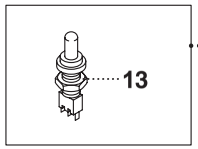

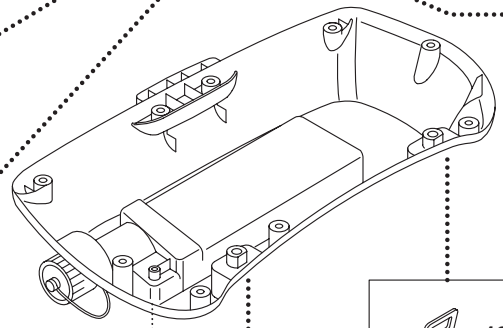

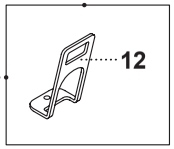

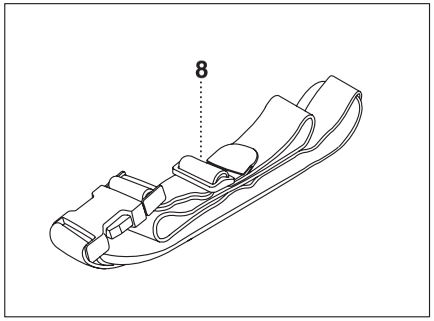

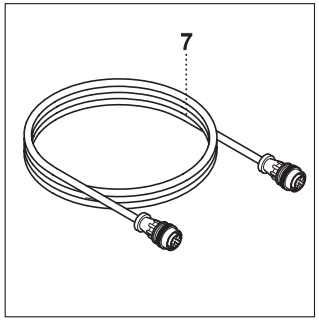

UN01-R-2090-EH

UNISTUDIO - Moder

POS.	N°CODICE	Q	DESCRIZIONE	DESIGNATION	BENENNUNG	DESCRIPTION	DENOMINACIONES
1	510978	1	UNITA' TRASMITTENTE	UNITE EMETTRICE	SENDEREINHEIT	TRANSMITTER UNIT	UNIDAD TRANSMISORA
2	510850	1	CORPO RADIOCOMANDO	CORPS RADIOCOMMANDE	FUNKSTEUERUNGGEHÄUSE	RADIO CONTROL BODY	CUERPO RADIOCONTROL
3	510976	1	ANTENNA	ANTENNE	ANTENNE	ANTENNA	ANTENA
4	501001	1	UNITA' RICEVENTE	UNITE RECEPTRICE	EMPFANGSEINHEIT	RECEIVER UNIT	UNIDAD RECEPTORA
5	510581	1	CARICABATTERIA	CHARGEUR BATTERIE	BATTERIELADEGERÄT	BATTERY CHARGER	CARGADOR BATERIA
6	510582	1	BATTERIA	BATTERIE	BATTERIE	BATTERY	BATERIA
7	510977	1	CAVO	CABLE	KABEL	CABLE	CABLE
8	510755	1	CINGHIA	COURROIE	RIEMEN	BELT	CORREA
9	510585	1	PULSANTE	BOUTON	TASTE	BUTTON	BOTON
10	510885	1	PULSANTE	BOUTON	TASTE	BUTTON	BOTON
11	510756	1	INTERRUTTORE	INTERRUPTEUR	SCHALTER	SWITCH	INTERRUPTOR
12	510890	1	GANCIO	CROCHET	HAKEN	HOOK	GANCHO
13	510883	1	INTERRUTTORE	INTERRUPTEUR	SCHALTER	SWITCH	INTERRUPTOR
14	510884	1	INTERRUTTORE	INTERRUPTEUR	SCHALTER	SWITCH	INTERRUPTOR
15	510586	1	LEVA	LEVIER	HEBEL	LEVER	PALANCA
16	510874	1	COPERCHIO	COUVERCLE	DECKEL	COVER	TAPA
17	510882	1	COPERCHIO	COUVERCLE	DECKEL	COVER	TAPA
18	510881	1	COPERCHIO	COUVERCLE	DECKEL	COVER	TAPA

RADIOCOMANDO SCANRECO 6F 24 V COM. STD “470292”

** Radiocommande*
** Radio control*
** Funksteuerung*
** Radiocontrol*

TAV. SY.02.02

matr. G.A23.0001

PM 12,5
PM 12,5 S
PM 13,5 SP

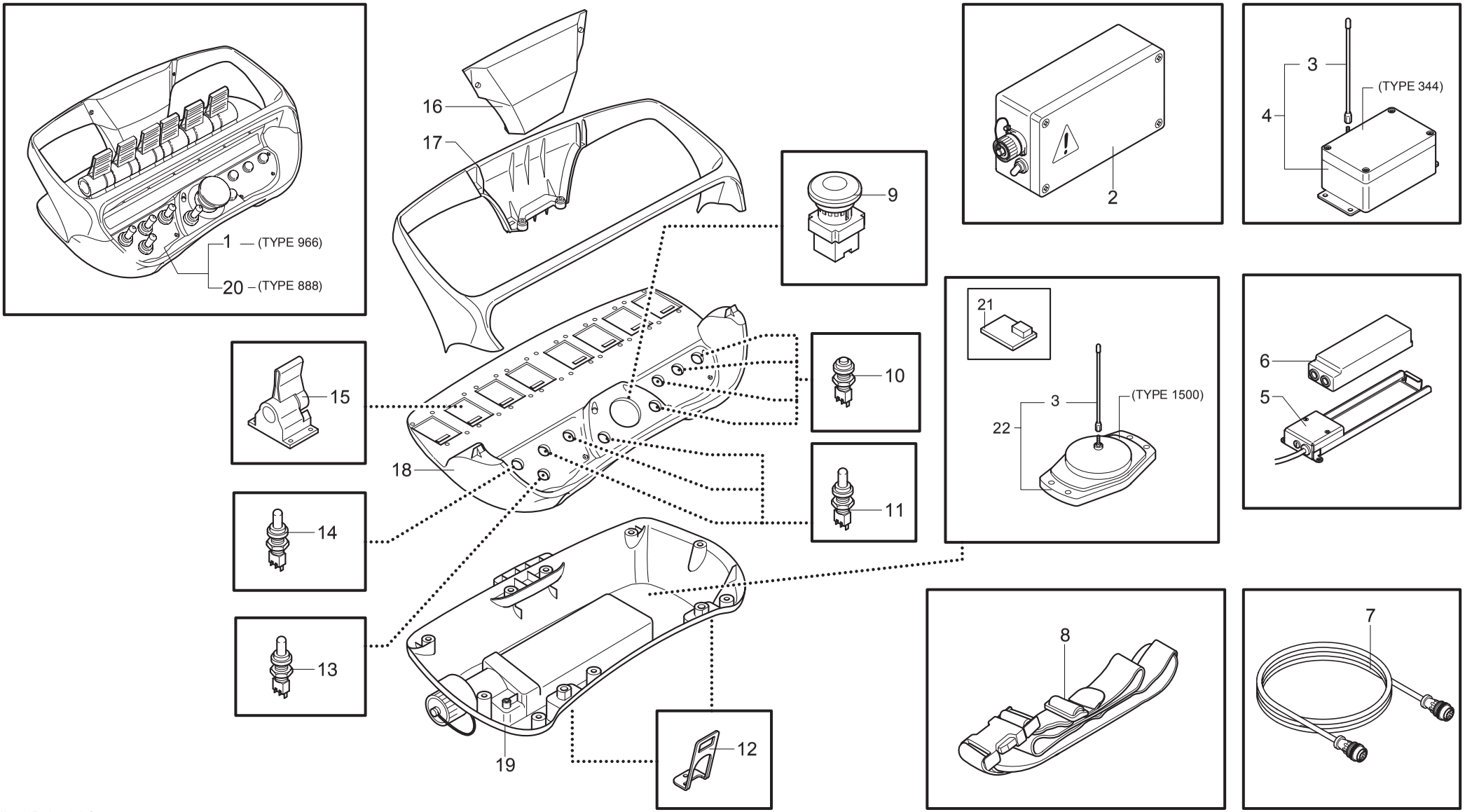

UN01-R-1440-LG

UNISTUDIO - Moder

POS.	N°CODICE	Q	DESCRIZIONE	DESIGNATION	BENENNUNG	DESCRIPTION	DENOMINACIONES
1	510575	1	UNITA' TRASMITTENTE	UNITE EMETTRICE	SENDEREINHEIT	TRANSMITTER UNIT	UNIDAD TRANSMISORA
2	510738	1	UNITA' CENTRALE	UNITE CENTRALE	ZENTRALEINHEIT	CENTRAL UNIT	UNIDAD CENTRAL
3	510587	1	ANTENNA	ANTENNE	ANTENNE	ANTENNA	ANTENA
4	510579	1	UNITA' RICEVENTE	UNITE RECEPTRICE	EMPFANGSEINHEIT	RECEIVER UNIT	UNIDAD RECEPTORA
5	510581	1	CARICABATTERIA	CHARGEUR BATTERIE	BATTERIELADEGERÄT	BATTERY CHARGER	CARGADOR BATERIA
6	510582	1	BATTERIA	BATTERIE	BATTERIE	BATTERY	BATERIA
7	510580	1	CAVO	CABLE	KABEL	CABLE	CABLE
8	510755	1	CINGHIA	COURROIE	RIEMEN	BELT	CORREA
9	510585	1	PULSANTE	BOUTON	TASTE	BUTTON	BOTON
10	510885	1	PULSANTE	BOUTON	TASTE	BUTTON	BOTON
11	510756	1	INTERRUTTORE	INTERRUPTEUR	SCHALTER	SWITCH	INTERRUPTOR
12	510890	1	GANCIO	CROCHET	HAKEN	HOOK	GANCHO
13	510883	1	INTERRUTTORE	INTERRUPTEUR	SCHALTER	SWITCH	INTERRUPTOR
14	510884	1	INTERRUTTORE	INTERRUPTEUR	SCHALTER	SWITCH	INTERRUPTOR
15	510586	1	LEVA	LEVIER	HEBEL	LEVER	PALANCA
16	510874	1	COPERCHIO	COUVERCLE	DECKEL	COVER	TAPA
17	510882	1	COPERCHIO	COUVERCLE	DECKEL	COVER	TAPA
18	510881	1	COPERCHIO	COUVERCLE	DECKEL	COVER	TAPA
19	510850	1	CORPO RADIOCOMANDO	CORPS RADIOCOMMANDE	FUNKSTEUERUNGGEHÄUSE	RADIO CONTROL BODY	CUERPO RADIOCONTROL
20	510948	1	UNITA' TRASMITTENTE	UNITE EMETTRICE	SENDEREINHEIT	TRANSMITTER UNIT	UNIDAD TRANSMISORA
21	510949	1	SCHEDA	FICHE	KARTE	BOARD	ESQUELA
22	510923	1	UNITA' RICEVENTE	UNITE RECEPTRICE	EMPFANGSEINHEIT	RECEIVER UNIT	UNIDAD RECEPTORA